SERVICE
Manual
ENG

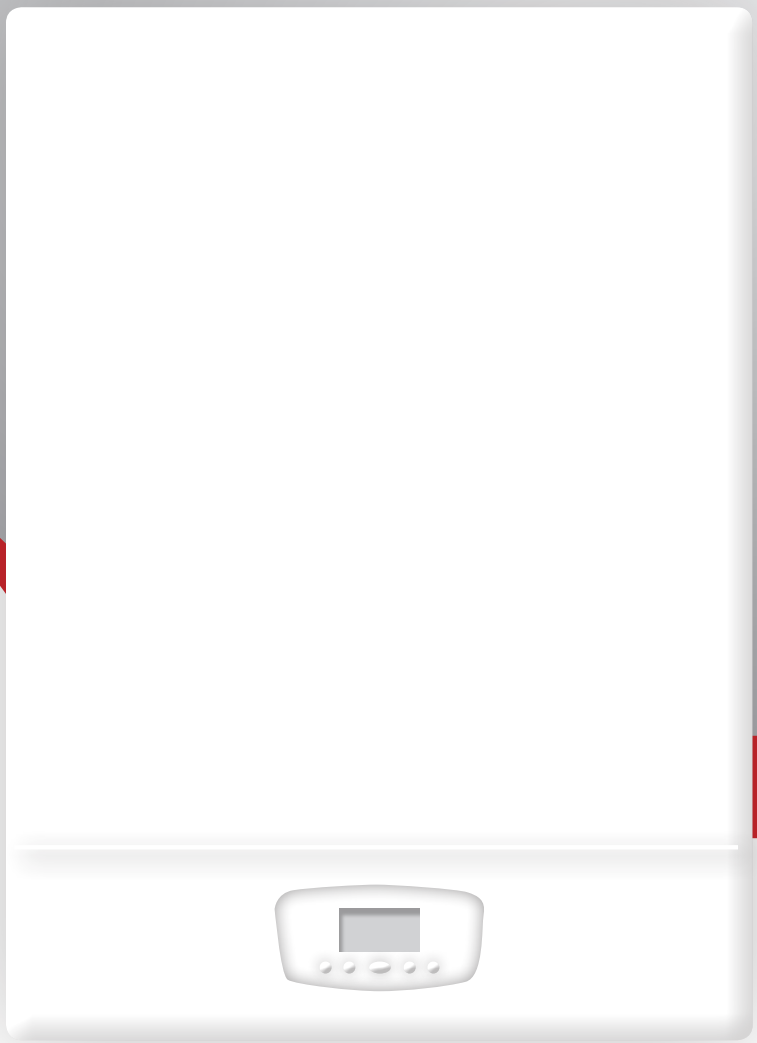

TIME POWER

50 K
70 K
90 K
115 K
160 K

Green Heating Technology

ITALTHERM

ITALIAN TECHNOLOGY • ITALIAN DESIGN • ITALIAN QUALITY

Table of Content

Available models

Model	Gas Type	Q input max	dimensions WxHxD	Weight
Time Power 50 K	G20/G31	47,5 kW	450 x 837 x 475	38,80 kg
Time Power 70 K	G20/G31	63 kW	450 x 837 x 475	45,80 kg
Time Power 90 K	G20/G31	85 kW	600 x 837 x 620	86,50 kg
Time Power 115 K	G20/G31	108 kW	600 x 837 x 620	92,00 kg
Time Power 160 K	G20/G31	150 kW	600 x 837 x 725	108,30 kg

Spare PCB content

Nr. 1 Instruction sheet multi-language
Nr. 1 PCB
Nr. 1 Red wire jumper (mounted on M12 – pins 57-58)*

* *Floor Thermostat contact for floor low temperature plant; E24 will appear if this contact will be open. Leave the jumper in, unless a normally-closed thermostat from the floor heating plant is connected in its place.*

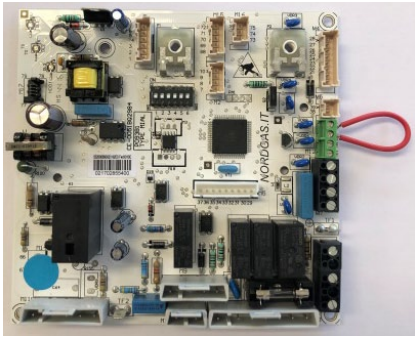

Installation

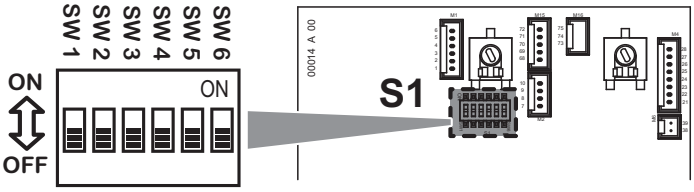

Take off electric supply before opening control panel and replacing PCB

Don't change micro-switches status (all OFF)

Position P1: completely turned clockwise
Position P2: completely turned anticlockwise

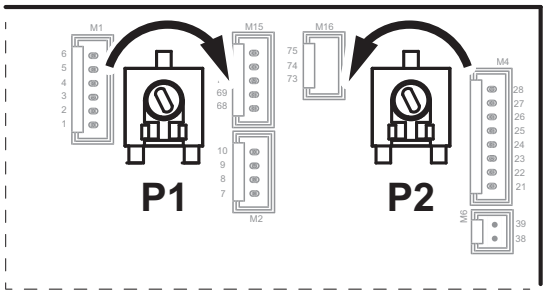

With 160 kW boiler, before closing the control panel, take note of the new PCB firmware for choosing the right action.

Power ON and find your boiler model in the table here below. In case follow instructions.

How to find the firmware

Boiler Model	Instructions
50 K	Change **Par 0** into **2**, otherwise **E32** will be showed
70 K	Change **Par 0** into **3**, otherwise **E32** will be showed
90 K	**No actions** are required
115 K	Change **Par 0** into **5**
160 K	Change **Par 0** into **5**
	ONLY IF PCB firmware is **K010D** or precedent With **G20** modify **Par 13 = 150** and **Par 14 = 740** With **G31** modify **Par 13 = 150** and **Par 14 = 720**

Enter menu parameters pressing together with boiler in OFF mode

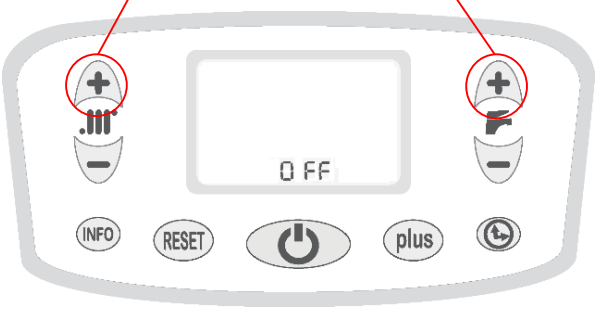

Changing parameter number

Changing parameter value

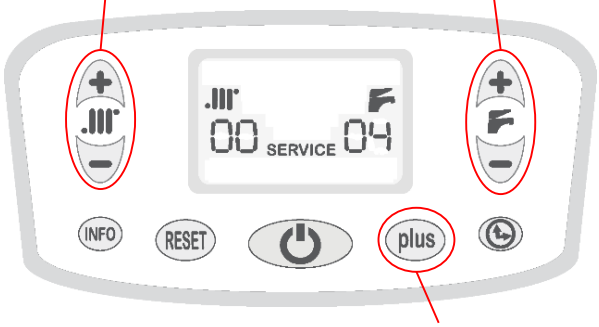

Storing value

Check list for first ignition

Installation done under country regulation in force		✔
Flues and Air system	Verify that silicon gasket is correctly installed	
	No leakage between part of the system (extension, bends and flanges)	
	Avoid flues recirculation, respecting the minimum distances with split and concentric configurations	
Hydraulic plant	Correct plant pressure checked with cold system temperature	
	Ensure correct air bleeding	
	If present, check external tank connection according to its instruction provided with kit	
Gas plant	Check inlet pressure Static ……..mbar Dynamic ……mbar	
	Avoiding gas leakage from the gas connection on the boiler	
Electric connection	Check correct electric supply polarity and its values 230V (-15% +10%) - 50Hz	
	Check the correct 3way valve supply connection and replace the factory-installed resistor with tank probe provided in the kit	
	Remove the black electric plug already mounted and cable a plug suitable for your electrical supply	
Condense syphon	Fill syphon with water through the exhaust flues flange mounted on the top (adhesive on the metal cover)	
	Before discharging on the environment, connect to a waste water or treating its acidity with relevant products according to the local laws.	
Flues Test	Checking CO_2 value	
	CO_2 Qr ……..%	
	CO_2 Qn ……..%	
	If CO_2 values are not correct, do the procedure “Manual Calibration”	

Gas conversion

MOD.	HEAT INPUT	NATURAL GAS G20		COMMERCIAL PROPANE G31	
		CO_2 at Qn and ignition (%)	CO_2 at Qr (%)	CO_2 at Qn and ignition (%)	CO_2 at Qr (%)
50 K	Nominal value	9.3	8.9	10.3	9.8
	Allowed range	8.8 … 9.8	8.4 … 9.4	9.8 … 10.8	9.3 … 10.3
70 K	Nominal value	9.2	8.8	10.3	9.8
	Allowed range	8.7 … 9.7	8.3 … 9.3	9.8 … 10.8	9.3 … 10.3
90 K	Nominal value	9.2	8.8	10.3	9.8
	Allowed range	8.7 … 9.7	8.3 … 9.3	9.8 … 10.8	9.3 … 10.3
115 K	Nominal value	9.3	8.8	10.3	9.9
	Allowed range	8.8 … 9.8	8.3 … 9.3	9.8 … 10.8	9.4 … 10.4
160 K	Nominal value	9.3	9.0	10.2	9.6
	Allowed range	8.8 … 9.8	8.5 … 9.5	9.7 … 10.7	9.1 … 10.1

In the case of liquid gas fuel, it is important that the boiler be exclusively fuelled with commercial Propane G31 and not with Butane G30. For this reason, we recommend that the supplier of the fuel be informed, for example, by applying a suitable warning on the gas tank or in its immediate vicinity, so that it is visible to the employee at the time it is being filled.

User guide

The front control panel: PUSHBUTTONS

	Stand-by / Operating mode At each pressure, boiler switches cyclically from OFF mode to Summer and Winter operating modes. The present mode is indicated by the writing **OFF**, or through the simultaneous presence of the symbols and (Winter mode) or of the symbol but not of the symbol (Summer mode) or (Only Heating mode).	Only if combined with domestic water boiler
+ –	**Heating adjustment** They adjust heating system temperature. If External Probe Kit is installed, see also "External probe kit" on page 34.	
+ –	**Hot water setting:** They adjust water temperature in domestic water storage (when this function is managed by the single boiler).	Only if combined with domestic water boiler
INFO	It shows on the display additional information related to boiler operation. (For details, see boiler's user instructions).	
RESET	Press it in order to restore boiler operation after a shut-down. See "Alarms - errors" on page 24 for details on possible shut-downs.	
plus	It manually sets activation and deactivation of the boiler quick preparation function.	Only if combined with domestic water boiler
	It activates automatic time programming of the boiler preparation function. It is used also in its programming and in the clock setting.	Only if combined with domestic water boiler

DISPLAY - symbols enabled in this model and their description

	CH – winter mode indication If flashing, it means that the boiler is functioning in CH mode. See also the remark in the descrition of symbol .
	Burner ON It indicates the presence of the flame in the burner.
	DHW mode indication If flashing, it means that the boiler is functioning to produce hot water. If both and symbols flash at the same time, a Technician-reserved function has been activated. In this case, turn immediately the boiler off - and then turn it on again - by means of the button .
56 E	Two digit display under the symbol Normally, it displays the CH flow temperature, i.e the temperature of the liquid on boiler's outlet that is sent to the CH system. During the CH temperature setting (by pressing the buttons + and –), it shows the temperature value changing; in case of alarm it displays "E"; during the setting (reserved to the Technician) it displays the chosen parameter ID number
43 OFF	Three digit display under the symbol Normally, it displays the temperature of the hot water on boiler's outlet. When the boiler is in stand-by mode, it displays OFF . During the DHW temperature setting (by pressing the buttons + and –), it shows the temperature value changing; in case of alarm it displays the ID number of the alarm;during the setting (reserved to the Technician) it displays the value of the chosen parameter.
RESET	It appears when the boiler is locked or anyway is present an error that the user could manage.
SERVICE	It appears when the boiler has detected an error (mainly a fault) that has to be managed by the Technician.
	It informs that the outdoor probe (accessories) is installed. Note: In this case the CH system temperature is automatically set and so the use of buttons + and – is different from the standard way: for deeper details rely on kit instruction and also "External probe kit" on page 34.

Accessing the main board

To access the management board

Cut power to the boiler. Restore power supply only after having closed the dashboard back cover.

- Loosen the screws **1** and remove dashboard back cover.

An incorrect or not complete closure of the electronic box voids the IP grade of protection of the appliance. Ensure that all closing items are correctly used and that all cables pass through the suitable slots. If one or more latches 2 should break, please use holes 3 with suitable screws (similar to the standard ones 1).

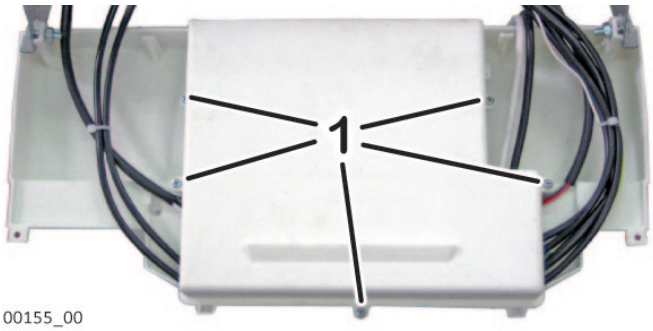

Models 50 K and 70 K

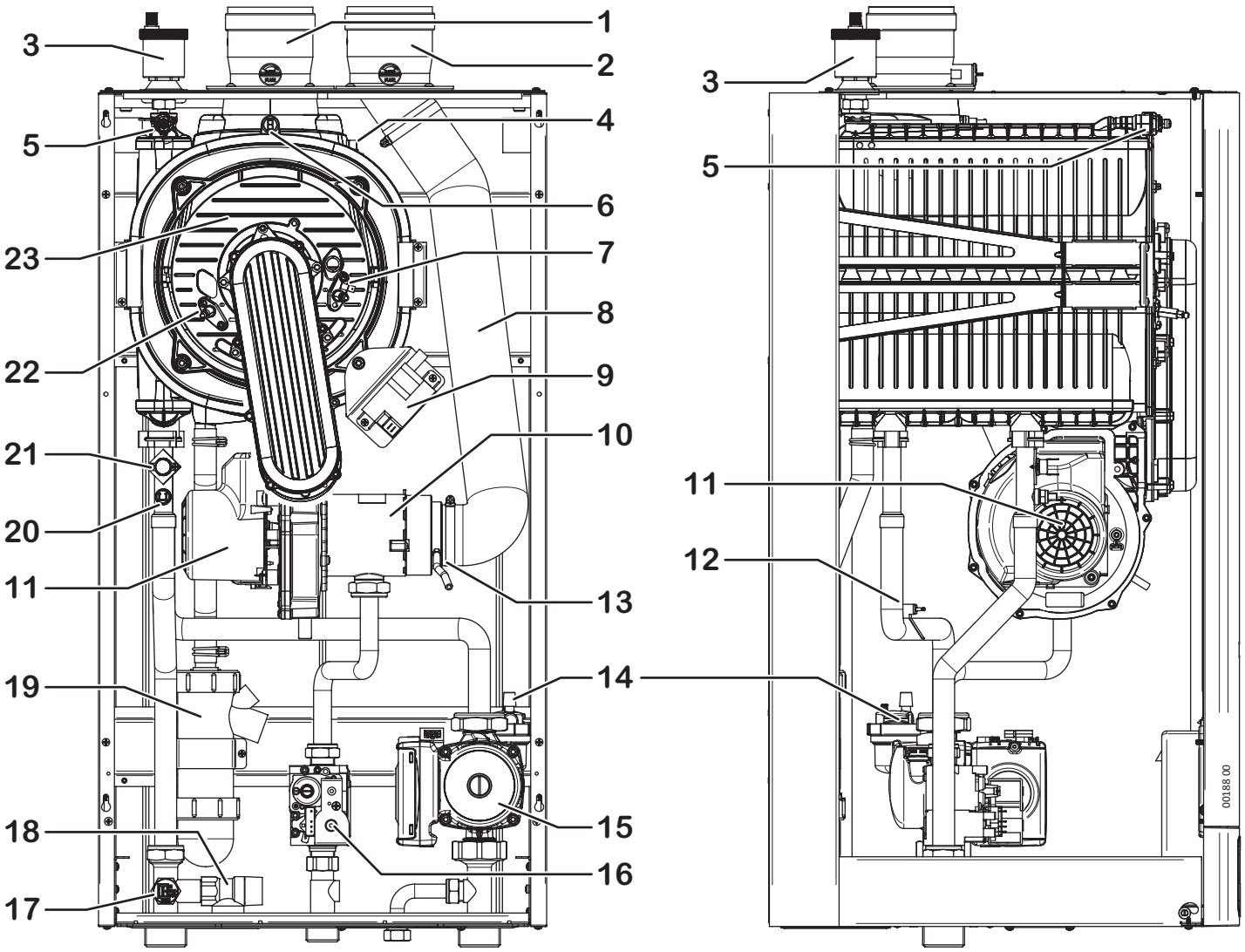

1 Fume exhaust connector (with connection point for combustion test)
2 Suction connector (with connection point for combustion test)
3 Boiler automatic air purging valve
4 Combustion unit thermal fuse (connector)
5 Combustion unit air purging manual valve
6 Fume thermal fuse
7 Ignition electrode
8 Suction hose
9 Discharge igniter
10 Mixer (air/gas mixing device)
11 Motor-driven fan
12 System return temperature probe
13 Gas valve compensation connection point
14 Circulation pump automatic air purging valve
15 Modulating circulation pump
16 Gas valve
17 System pressure transducer
18 3-bar safety valve
19 Condensation-collecting siphon
20 System delivery temperature probe
21 Boiler safety thermostat (delivery)
22 Detection electrode
23 Combustion unit (burner + main exchanger)

Models 90 K and 115 K

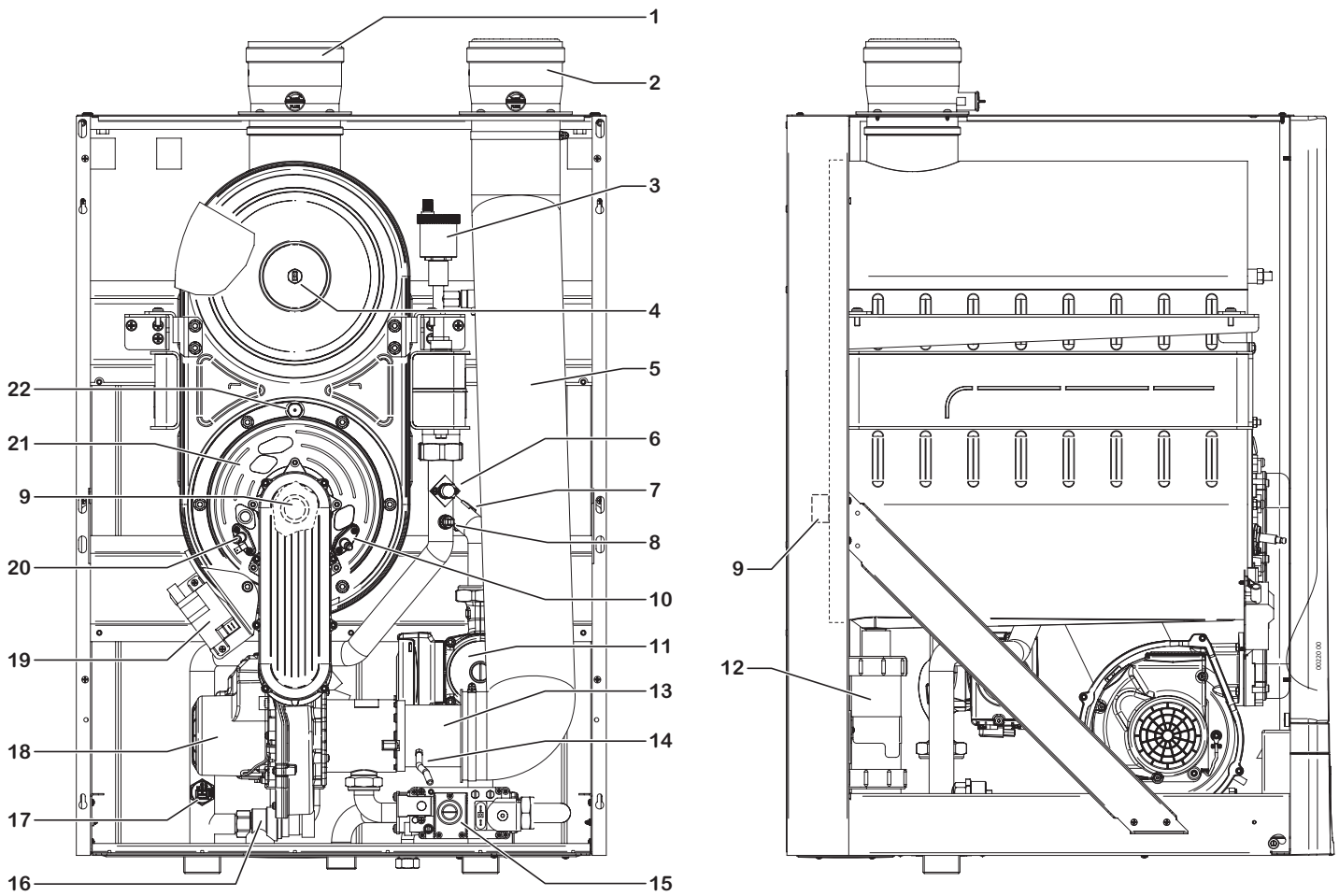

1 Fume exhaust connector (with connection point for combustion test)
2 Suction connector (with connection point for combustion test)
3 Boiler automatic air purging valve
4 Fume thermal fuse
5 Suction hose
6 Boiler safety thermostat (delivery)
7 System return temperature probe
8 System delivery temperature probe
9 Combustion unit thermal fuse (non-replaceable)
10 Ignition electrode
11 Modulating circulation pump
12 Condensation-collecting siphon
13 Mixer (air/gas mixing device)
14 Gas valve compensation connection point
15 Gas valve
16 4.5-bar safety valve
17 System pressure transducer
18 Motor-driven fan
19 Discharge igniter
20 Detection electrode
21 Combustion unit (burner + main exchanger)
22 Combustion unit thermostat (manually resettable)

Model 160 K

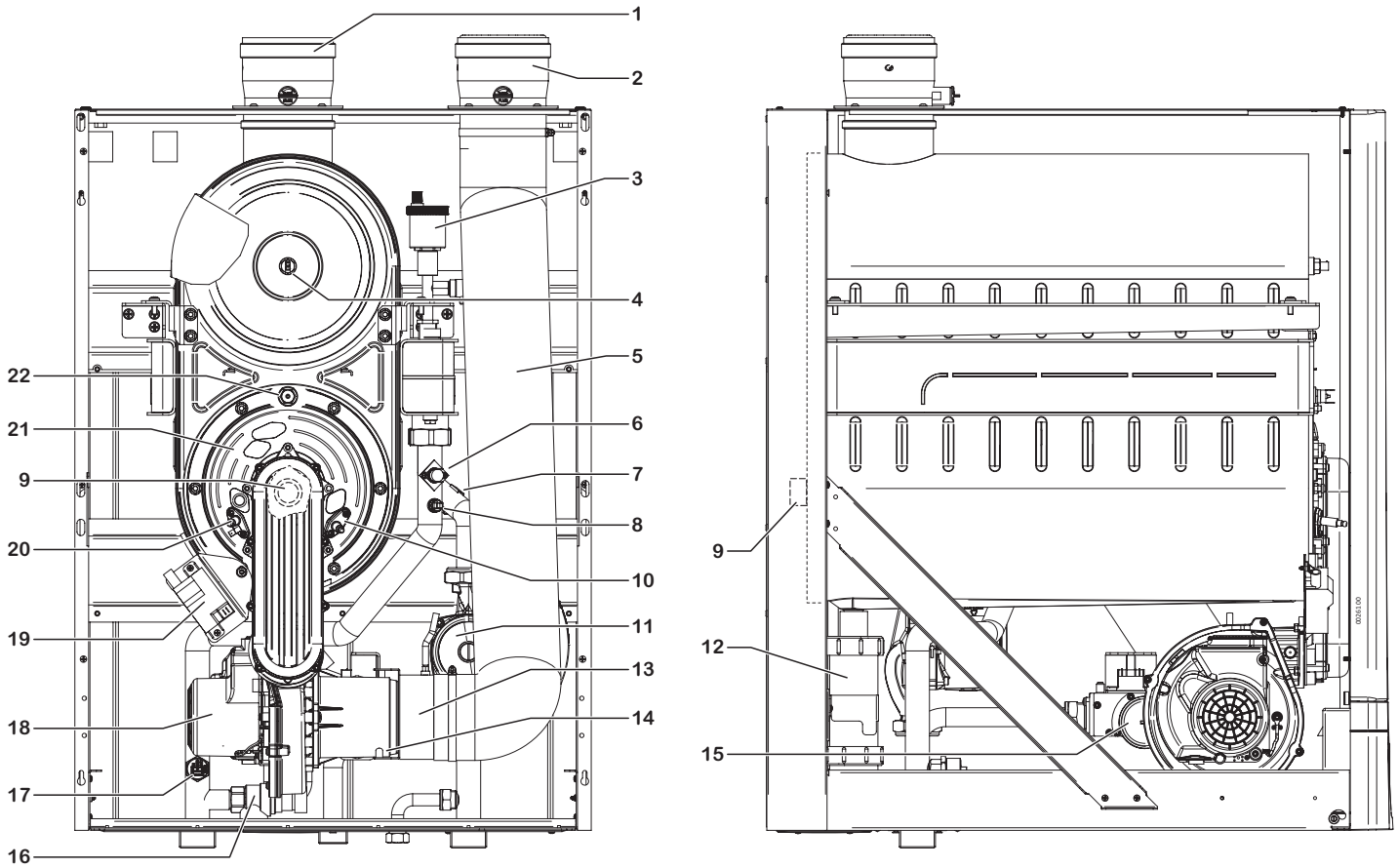

1 Fume exhaust connector (with connection point for combustion test)
2 Suction connector (with connection point for combustion test)
3 Boiler automatic air purging valve
4 Fume thermal fuse
5 Suction hose
6 Boiler safety thermostat (delivery)
7 System return temperature probe
8 System delivery temperature probe
9 Combustion unit thermal fuse (non-replaceable)
10 Ignition electrode
11 Modulating circulation pump
12 Condensation-collecting siphon
13 Mixer (air/gas mixing device)
14 Gas valve compensation connection point
15 Gas valve
16 4.5-bar safety valve
17 System pressure transducer
18 Motor-driven fan
19 Discharge igniter
20 Detection electrode
21 Combustion unit (burner + main exchanger)
22 Combustion unit thermostat (manually resettable)

Models 50 K and 70 K

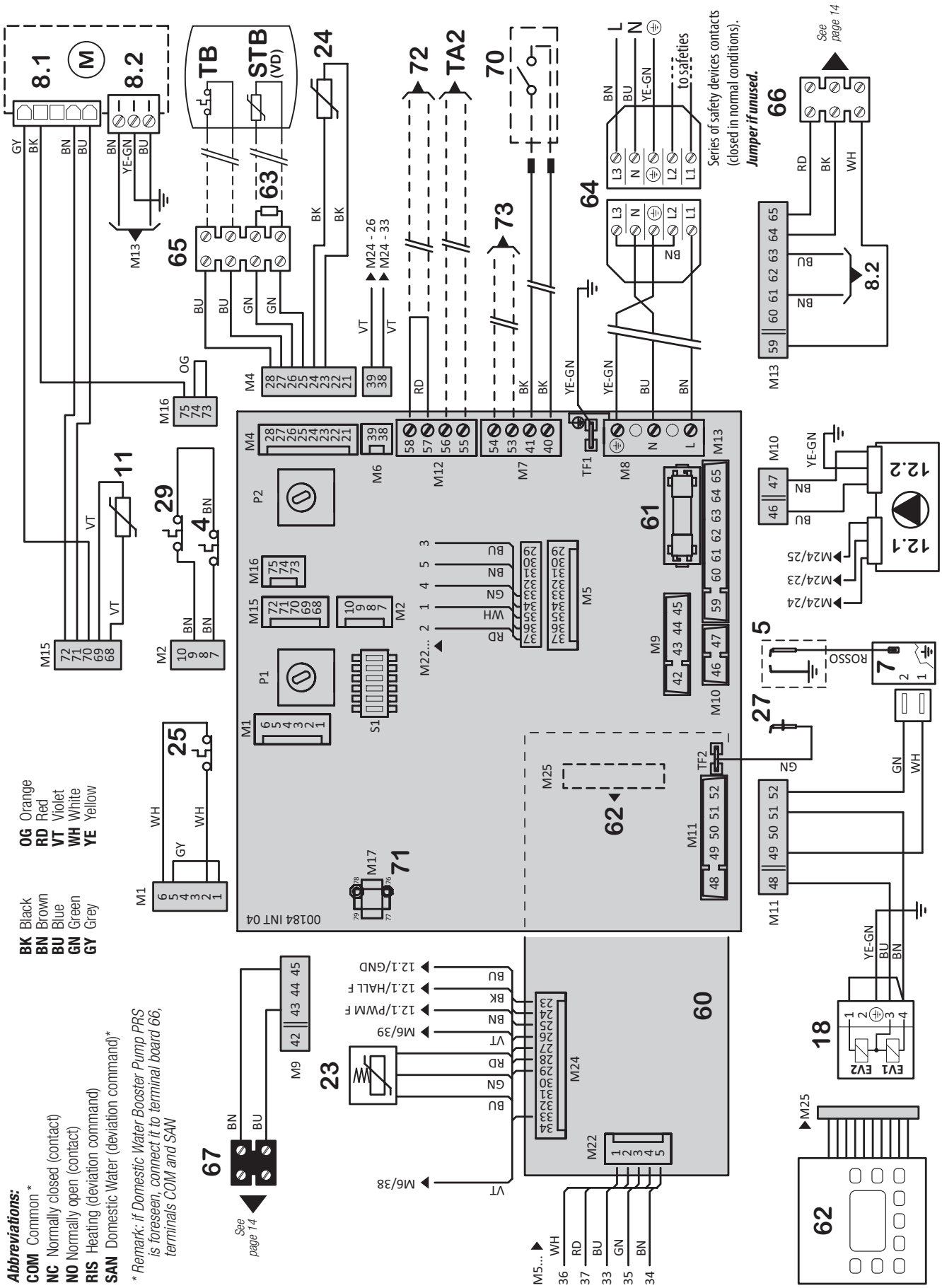

Models 90 K and 115 K

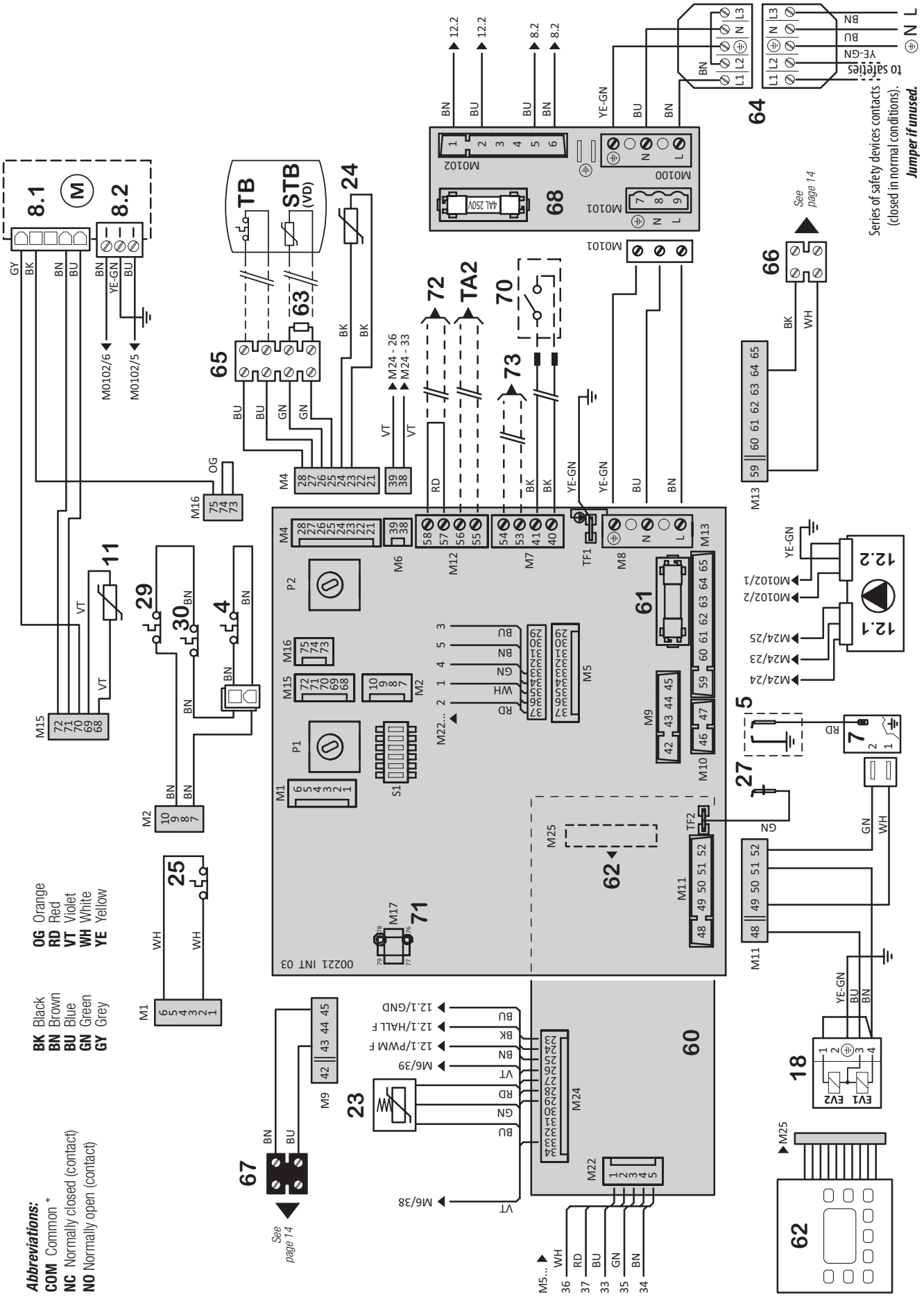

Model 160 K

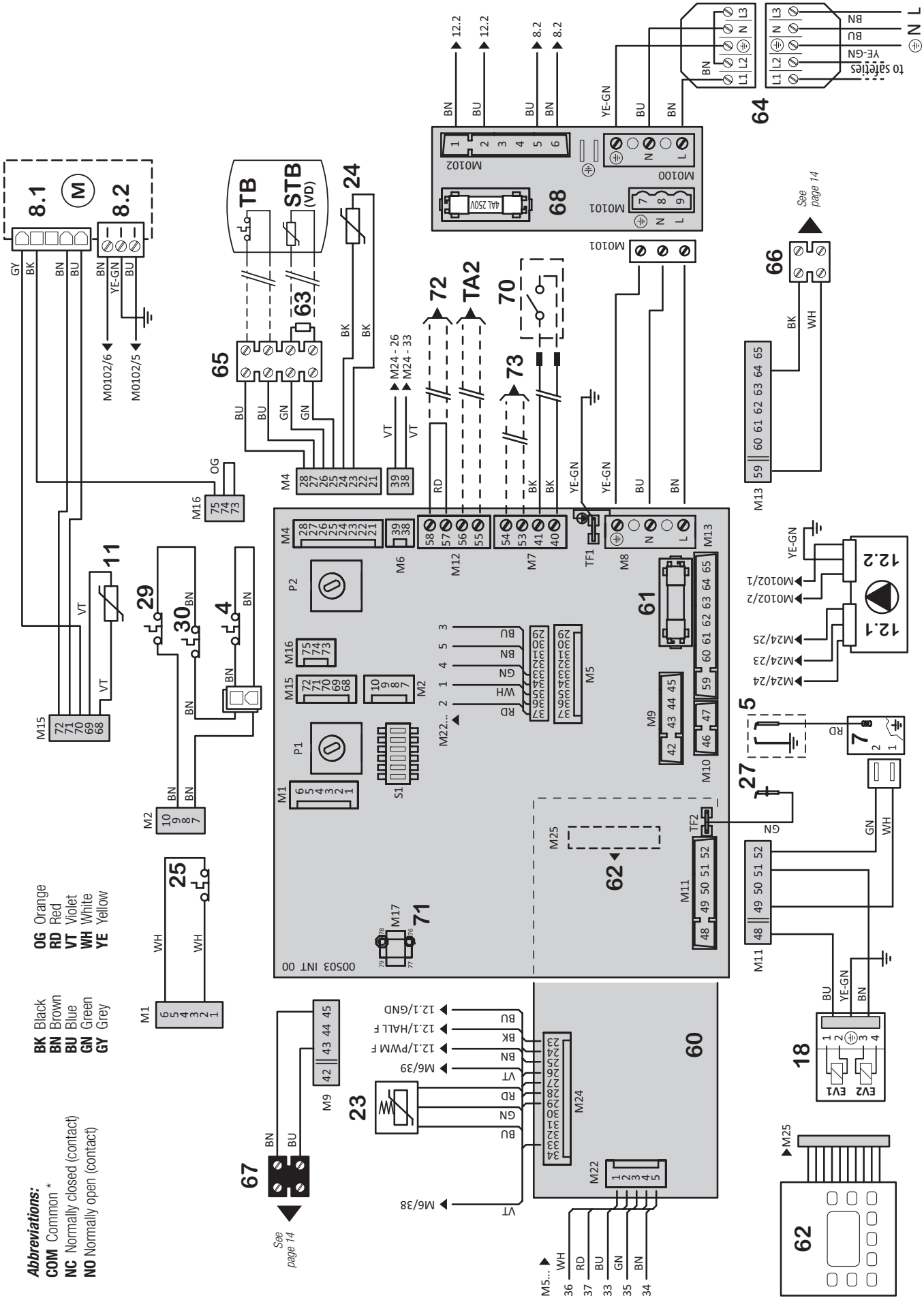

Abbreviations:
COM Common *
NC Normally closed (contact)
NO Normally open (contact)

BK Black
BN Brown
BU Blue
GN Green
GY Grey

OG Orange
RD Red
VT Violet
WH White
YE Yellow

4 Combustion unit thermal fuse (*)
5 Ignition electrode
7 Discharge igniter
8.1 Motor-driven fan - speed control
8.2 Motor-driven fan - power supply
11 System return temperature probe
12.1 Modulating circulation pump - speed control
12.2 Modulating circulation pump - power supply
18 Gas valve (opening control)
23 System pressure transducer
24 System delivery temperature probe
25 Boiler safety thermostat (delivery) (*)
27 Detection electrode
29 Fume thermal fuse (*)
30 Combustion unit thermostat (manual reset) (*)
60 Display board
61 F2A fuse (quick 2 A)
62 Control keyboard
63 2.2 kOhm - 1/2W (**) resistor
64 Power supply connector through safeties kit (**) (***)
65 Boiler connection terminal board
66 Terminal board for connection of VD by-pass valve kit (only models 50kW and 70kW) or PRS Domestic Water Booster Pump
67 Terminal board for PRR Heating Booster Pump control
68 Electric charges board

External components, optional:

70 **Ambient thermostat:** *Ambient Thermostat or Chronothermostat (available on the market) simple contact in very low SELV safety voltage. Closed contact = active request.*
Remote control: *terminals of the original remote control device, in compliance with the OPENTHERM protocol. To install, remove junction between the two conductors and connect to device terminals (extend if necessary)*
71 Preparation for area system kit *with remote control*
72 Preparation for underfloor heating system safety thermostat
73 Preparation for external probe kit
81 System temperature safety block thermostat (*) (**) (•)
82 Minimum pressure switch (*) (**) (•)
83 Maximum pressure switch (*) (**) (•)
TA2 Preparation for differentiated temperature areas ambient thermostat
TB Domestic water storage thermostat (*) (**)
STB Sensor for domestic water storage temperature. *Included in the VD 3-way by-pass valve kit* (**)
VD 3-way by-pass valve kit - (only models 50kW and 70kW) (**)
PRR Heating Booster Pump *(foresee piloting relays)*
PRS Domestic Water Booster Pump *(foresee piloting relays)*

(*) contacts of these components are shown in rest / cold position.

(**) for details see "Power supply connections" on page 13

(***) the complete (male+female) connector is supplied, to properly connect the boiler to power supply of single or cascade systems

(•) Optional component, that can be required or not according to local or national regulations

Power supply connections

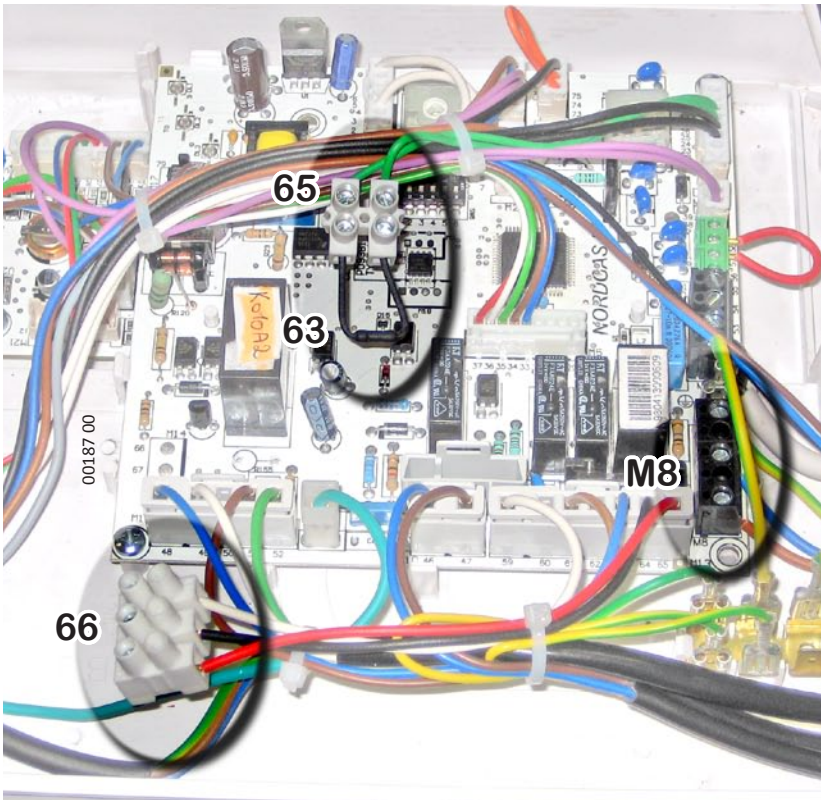

Optional safeties wiring example

Refer to local/national regulation for the requirements of these devices.

If safety devices are **not** required, **don't forget to jumper terminals L1 and L2 together** in the connector **64** - power supply side (see diagram).

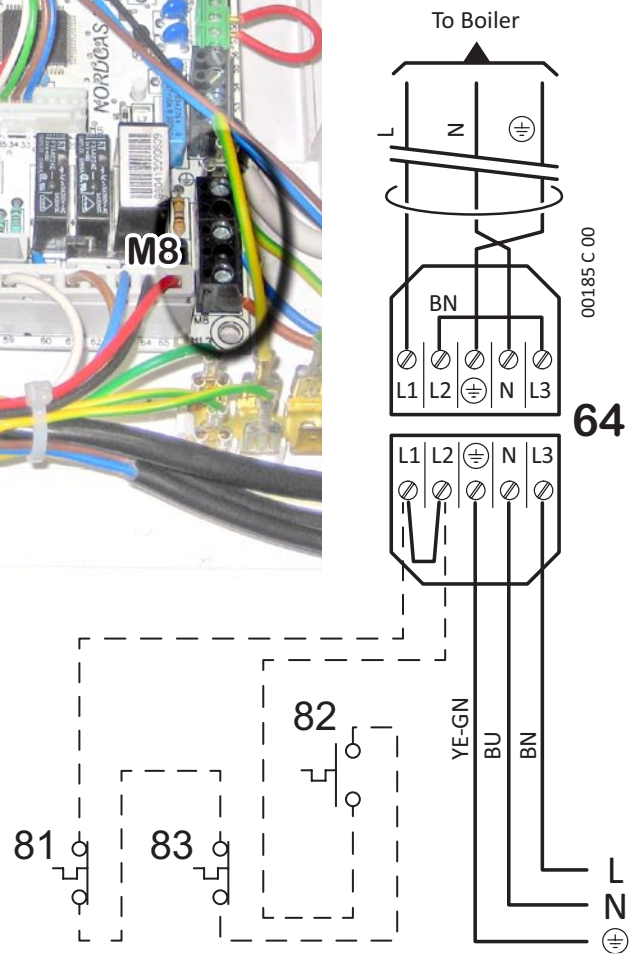

Remark: the contact of the minimum pressure switch **82** *(normally open) is shown in rest condition, i.e. at no system pressure. In conditions of normal operation, the system has the correct pressure and also this contact will be closed.*

Power Supply

Respect L-N polarity of power supply.

Insert an omnipolar switch with contact opening of at least 3 mm.

System control electric diagrams

BK Black
BN Brown
BU Blue
GN Green
GY Grey
OG Orange
RD Red
VT Violet
WH White
YE Yellow

50 kW and 70 kW models with Domestic Water Booster Pump (PRS) only

Set parameter **44** to the value **3**

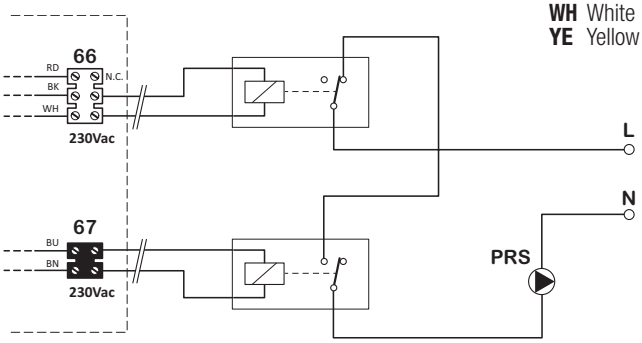

90 kW and 115 kW models with Domestic Water Booster Pump (PRS) only

Set parameter **44** to the value **3**

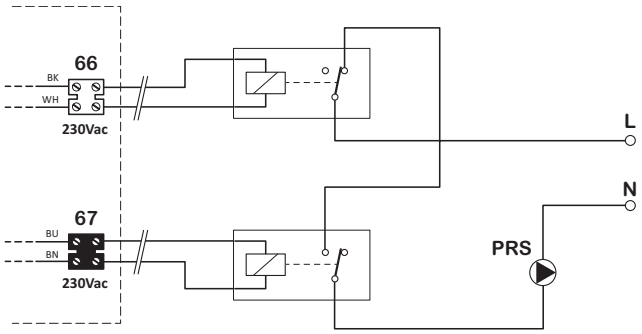

Models 50 kW and 70 kW with Heating Booster Pump (PRR) only and possible domestic water By-Pass Valve (VD).

Set parameter **44** to value **0 - 1** or **2** according to needs

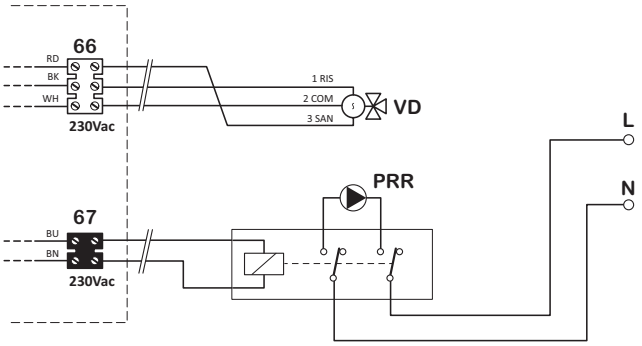

90 kW and 115 kW models with Heating Booster Pump (PRR) only

Set parameter **44** to value **0 - 1** or **2** according to needs

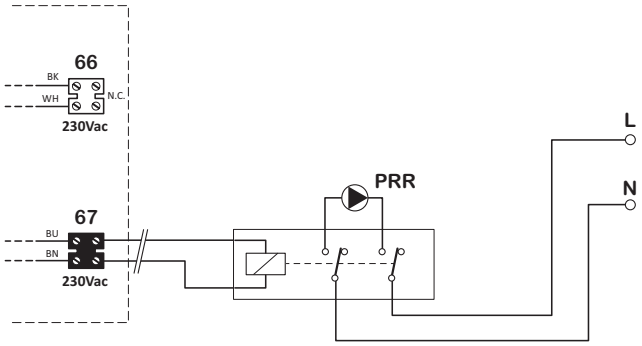

50 kW and 70 kW models with both Domestic Water (PRS) and Heating Booster Pumps (PRR)

Set parameter **44** to the value **3**

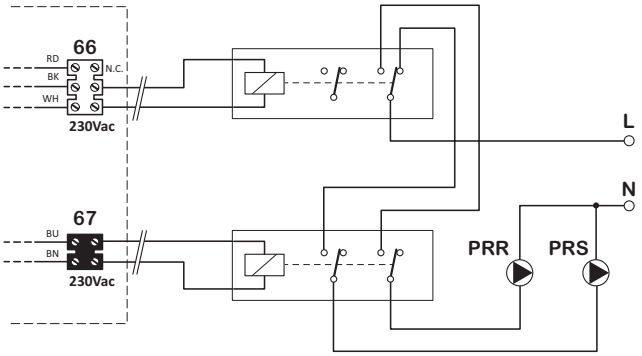

90 kW and 115 kW models with both Domestic Water (PRS) and Heating Booster Pumps (PRR)

Set parameter **44** to the value **3**

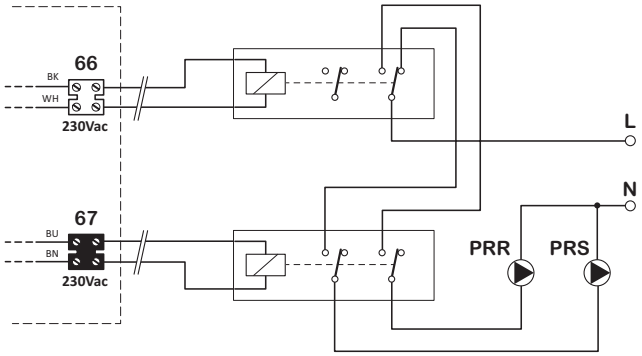

00224 INT 01

Filling the condensation collecting syphon

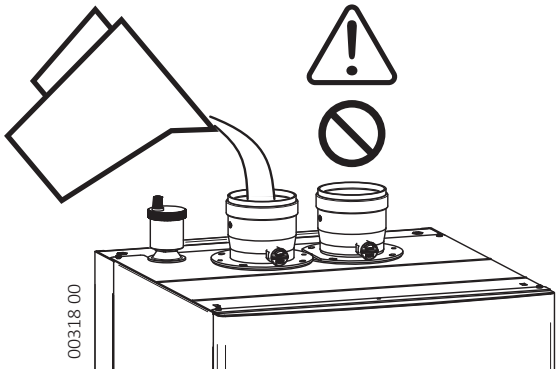

During First installation of boiler or after long inactivity periods, **fill the condense trap by pouring water** (about 1/2 litre) in the **flue OUTLET**, as shown in the picture.

Beware NOT to pour water in the inlet connection!

Gas valve

Connectors and coils

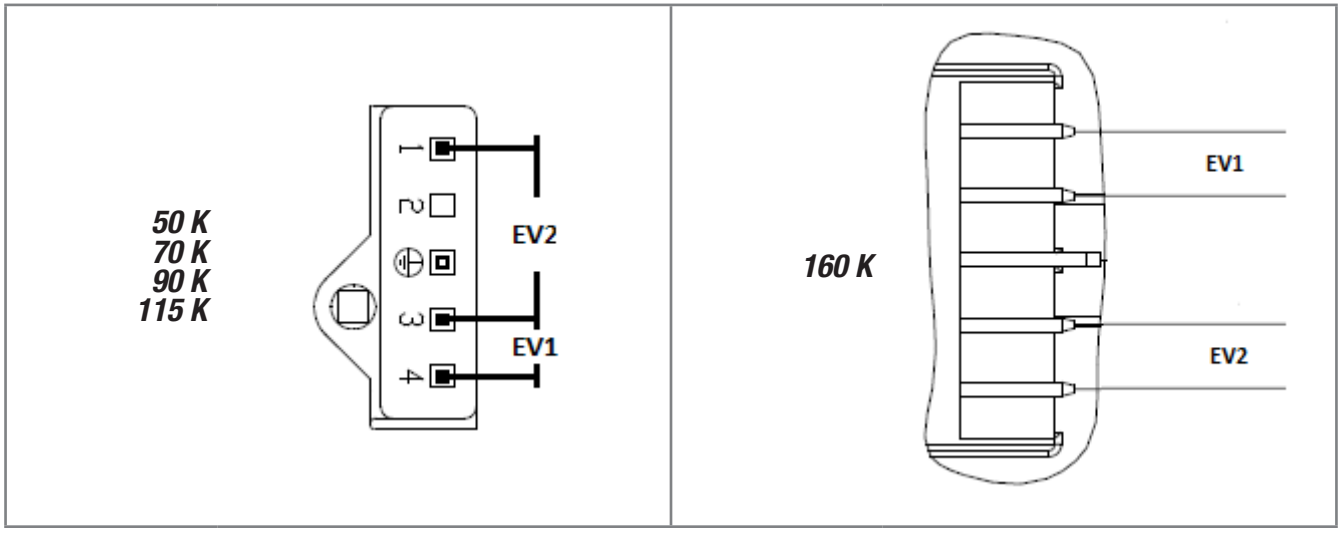

Gas valve adjustment - 50 K … 115 K

Before checking combustion (except in case of first ignition), clean burner and exchanger.

For check (and, if necessary, for adjustment) a **correctly calibrated fume analyser** is needed (in condensation boilers measurement precision and correctness is particularly important). Therefore, through a dashboard function, we will ignite burner at low flow first and then at maximum flow and we will carry out measurements and adjustments in both conditions. Proceed as follows:

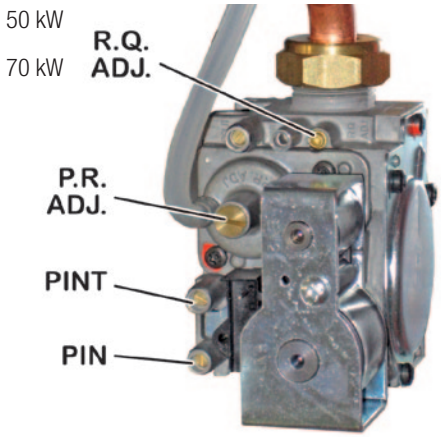

1. Boiler must be electrically powered and it must be set to **OFF**. Operate, if necessary, on key ⏻ (OFF shown on the display, at the bottom);
2. On the fume exhaust connector, unscrew fume analysis connection point screw, insert the analyser probe in the fume analysis connection point, ensuring connection waterproofness;

   Note: *Sensor located at the top of the probe should be located in a position as centred as possible of the exhaust flow: it is advisable to fully insert probe and then extract it by ca. 4 cm. Insert probe so that the probe protection bow, located at the top, is transversally located (the flow must flow through it and directly reach probe).*

Activate ambient Thermostat to generate a heat request and make sure that the heat produced byu the boiler can be dissolved by radiators (and/or radiating panels / underfloor heating systems).

3. activate boiler **at minimum non-modulated power**, entering the technical menu and using the "Chimneysweeper" function which can be activated selecting parameter **12** and setting value **0** (see "Parameters to manage boiler" on page 19): burner ignites at low flow.

4. referring to the following table, verify that the numerical indicator at the bottom, in the middle of the display, shows the correct value for the **rpm at Qr** for the **type of gas used*** *(you are measuring fan rpm x 100 at low flow, for example, value 14 means that fan turns at 1400 rpm);*

Flow		Natural gas (G20)		Commercial propane G31	
		CO2 %	Fan rpm	CO2 %	Fan rpm
50 K	Reduced Qr	8.9 ±0.5	1200	9.8 ±0.5	1200
	Rated Qn	9.3 ±0.5	5500	10.3 ±0.5	5200
70 K	Reduced Qr	8.8 ±0.5	1200	9.8 ±0.5	1200
	Rated Qn	9.2 ±0.5	5500	10.3 ±0.5	5200
90 K	Reduced Qr	8.8 ±0.5	1200	9.8 ±0.5	1200
	Rated Qn	9.2 ±0.5	6100	10.3 ±0.5	5700
115 K	Reduced Qr	8.8 ±0.5	1200	9.9 ±0.5	1200
	Rated Qn	9.3 ±0.5	6700	10.3 ±0.5	6700

5. wait until boiler reaches normal conditions (ca. 5 minutes). If the **CO_2** value of fumes at a **Qr** low flow for the **type of used gas** is included in the interval shown in the table, go to point **6** for check / adjustment at rated flow, otherwise CO_2 must be brought back into correct values, modifying the off-set by turning the **P.R.** screw. **ADJ.** (adjustment screw is inside the bush, under the screw plug). **ATTENTION: turn screw by 1/8-turn at a time and wait 1 minute** to let the value of CO_2 measured by the analyser stabilise;
   - if the **CO_2** value is **HIGHER** than allowed, **DECREASE** off-set by turning **P.R.** screw. **COUNTERCLOCKWISE ADJ.**;
   - if the **CO_2** value is **LOWER** than allowed, **INCREASE** off-set by turning **P.R.** screw. **CLOCKWISE ADJ.**;

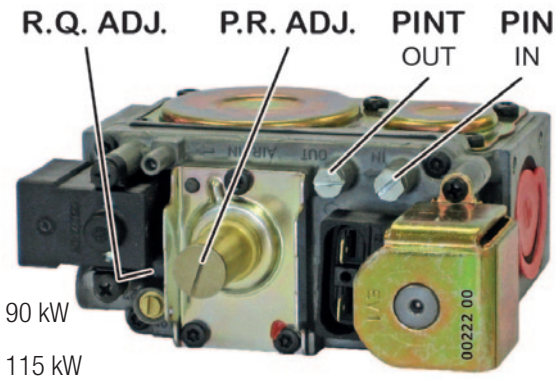

6. without exiting the technical menu, activate boiler at **maximum non-modulated power**, setting the parameter **12** to value **1**;
7. burner ignites at rated flow. Wait until boiler reaches normal conditions (ca. 5 minutes). If the **CO2** value in fumes at a **Qn** rated flow for the **type of used gas** is included in the values indicated in the table, exit the technical menu (boiler switches back to **OFF**), otherwise the gas flow rate must be adjusted turning the **R.Q.** screw. **ADJ.** . **ATTENTION: screw must be turned by 1/4 - 1/2-turn at a time**, and then it is necessary to wait 1 minute to let measured values stabilise:
   - if the **CO2** value is **HIGHER** than allowed, turn **R.Q.** screw. **CLOCKWISE ADJ.**;
   - if the **CO2** value is **LOWER** than allowed, turn **R.Q.** screw. **COUNTERCLOCKWISE ADJ.**

   Note: *If you have adjusted CO2 at rated flow, it is advisable to check again CO2 value at reduced flow (points from 3 to 5.)*
8. set parameter **12** to value **0**, then exit technical menu (see "Parameters to manage boiler" on page 19). Boiler switches back to OFF;

IMPORTANT: after verification or adjustment it is ESSENTIAL:

- to close, on the gas valve, the **PINT** pressure connection point, by screwing relevant screw;
- close fume connection point repositioning closing block **2** and screw **1** making sure that the plastic flange surface is not damaged or worn;
- seal **PR** screw plug **ADJ.** and **R.Q.** screw **ADJ.** , if they have been used;
- verify the correct seal of the fume circuit, in particular the seal of the closing block **2**.

Gas valve adjustment - 160 K

Before checking combustion (except in case of first ignition), clean burner and exchanger.

For check (and, if necessary, for adjustment) a **correctly calibrated fume analyser** is needed (in condensation boilers measurement precision and correctness is particularly important). Therefore, through a dashboard function, we will ignite burner at low flow first and then at maximum flow and we will carry out measurements and adjustments in both conditions. Proceed as follows:

1. Boiler must be electrically powered and it must be set to **OFF**. Operate, if necessary, on key (OFF shown on the display, at the bottom);
2. On the fume exhaust connector, unscrew fume analysis connection point screw, insert the analyser probe in the fume analysis connection point, ensuring connection waterproofness;

   Note: *Sensor located at the top of the probe should be located in a position as centred as possible of the exhaust flow: it is advisable to fully insert probe and then extract it by ca. 4 cm. Insert probe so that the probe protection bow, located at the top, is transversally located (the flow must flow through it and directly reach probe).*

Activate ambient Thermostat to generate a heat request and make sure that the heat produced byu the boiler can be dissolved by radiators (and/or radiating panels / underfloor heating systems).

3. activate boiler **at minimum non-modulated power**, entering the technical menu and using the "Chimneysweeper" function which can be activated selecting parameter **12** and setting value **0** (see "Parameters to manage boiler" on page 19): burner ignites at low flow.

4. referring to the following table, verify that the numerical indicator at the bottom, in the middle of the display, shows the correct value for the **rpm at Qr** for the **type of gas used*** *(you are measuring fan rpm x 100 at low flow, for example, value 14 means that fan turns at 1400 rpm);*

Flow		Natural gas (G20)		Commercial propane G31	
		CO2 %	Fan rpm	CO2 %	Fan rpm
160 K	Reduced Qr	9.0 ±0.5	1500	9.6 ±0.5	1500
	Rated Qn	9.3 ±0.5	7400	10.2 ±0.5	7200

5. wait until boiler reaches normal conditions (ca. 5 minutes). If the **CO_2** value of fumes at a **Qr** low flow for the **type of used gas** is included in the interval shown in the table, go to point **6** for check / adjustment at rated flow, otherwise CO_2 must be brought back into correct values, modifying the off-set by turning the screw. **1**. **ATTENTION: turn screw by 1/8-turn at a time and wait 1 minute** to let the value of CO_2 measured by the analyser stabilise;
   - if the **CO_2** value is **HIGHER** than allowed, **DECREASE** off-set by turning the screw **1 COUNTERCLOCKWISE**;
   - if the **CO_2** value is **LOWER** than allowed, **INCREASE** off-set by turning the screw **1 CLOCKWISE**;
6. without exiting the technical menu, activate boiler at **maximum non-modulated power**, setting the parameter **12** to value **1**;
7. burner ignites at rated flow. Wait until boiler reaches normal conditions (ca. 5 minutes). If the **CO2** value in fumes at a **Qn** rated flow for the **type of used gas** is included in the values indicated in the table, exit the technical menu (boiler switches back to **OFF**), otherwise the gas flow rate must be adjusted turning the **R.Q.** screw. **ADJ.** . **ATTENTION: screw must be turned by 1/4 - 1/2-turn at a time**, and then it is necessary to wait 1 minute to let measured values stabilise:
   - if the **CO2** value is **HIGHER** than allowed, turn the screw **2 CLOCKWISE**;
   - if the **CO2** value is **LOWER** than allowed, turn the screw **2 COUNTERCLOCKWISE**

   Note: *If you have adjusted CO2 at rated flow, it is advisable to check again CO2 value at reduced flow (points from 3 to 5.)*
8. set parameter **12** to value **0**, the4 exit technical menu (see "Parameters to manage boiler" on page 19). Boiler switches back to OFF;

IMPORTANT: after verification or adjustment it is ESSENTIAL:

- to close, on the gas valve, the **PINT** pressure connection point, by screwing relevant screw;
- close fume connection points by means of the relevant screw plugs;
- seal gas valve's screws **1** and/or **2**, if they have been used;
- verify the correct seal of the fume circuit, in particular the seal of the fume connection points.

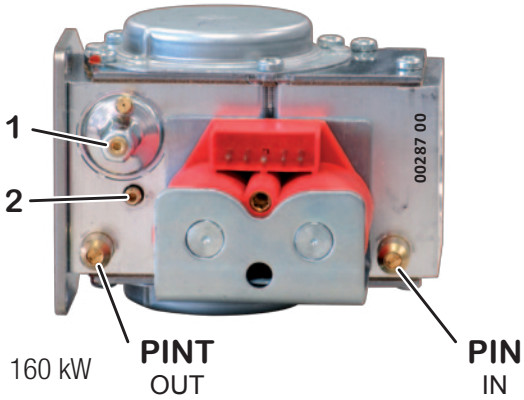

Kits and operations for Gas Conversion

Models 50 K … 115 K

Content

1 Mixer assembly
2 Gasket, 3/4", for the connection of the gas pipe to the gas valve.
3 Gasket, for the connection of the gas pipe to the mixer assembly:
- *50 kW assembly: 3/4" (same as gasket **2**)*
- *70 kW - 90 kW and 115 kW assembly: 1"*

4 Gasket (O-ring) for the coupling of the mixer assembly to the fan
5 Label indicating the type of gas
6 Sticker for tank (only in kits for conversion to G31)

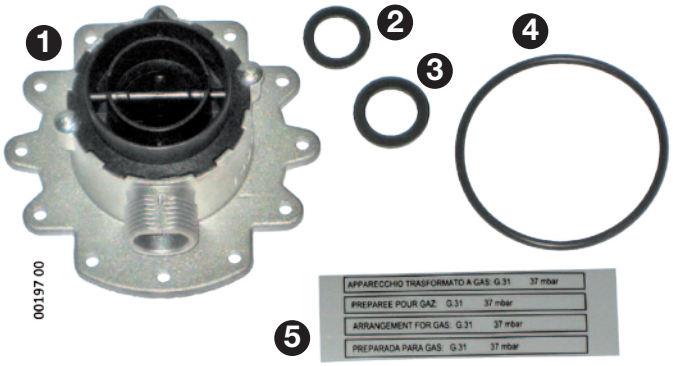

Kit installation

WARNING:

- Set parameter **PC 01** according to gas type: **0** for **Natural Gas (G20)**, **1** for **Propane (G31);** for further information see the User Manual);
- Put the gas type sticker **5** close to the bottom of the WARNING label inside the boiler;

Kits and operations for Gas Conversion

- **Always replace every gasket**;
- Please note that boiler can only be supplied with **Propane G31. Using Butane G30 boiler could not work properly**. Therefore, put the sticker **6** on the gas tank or close to it, in order to be seen clearly while next gas supplying will occur;
- The adapter **7** is fitted on mixer assembly **1**. During gas conversion, check gasket **9** is correctly placed on its spot. The adapter must be fully inserted in the mixer assembly, therefore the slots **8** must match the two screw heads on the mixer.

Other parts
7 Mixer/air pipe adapter
8 Slots in the adapter
9 Gasket of the adapter

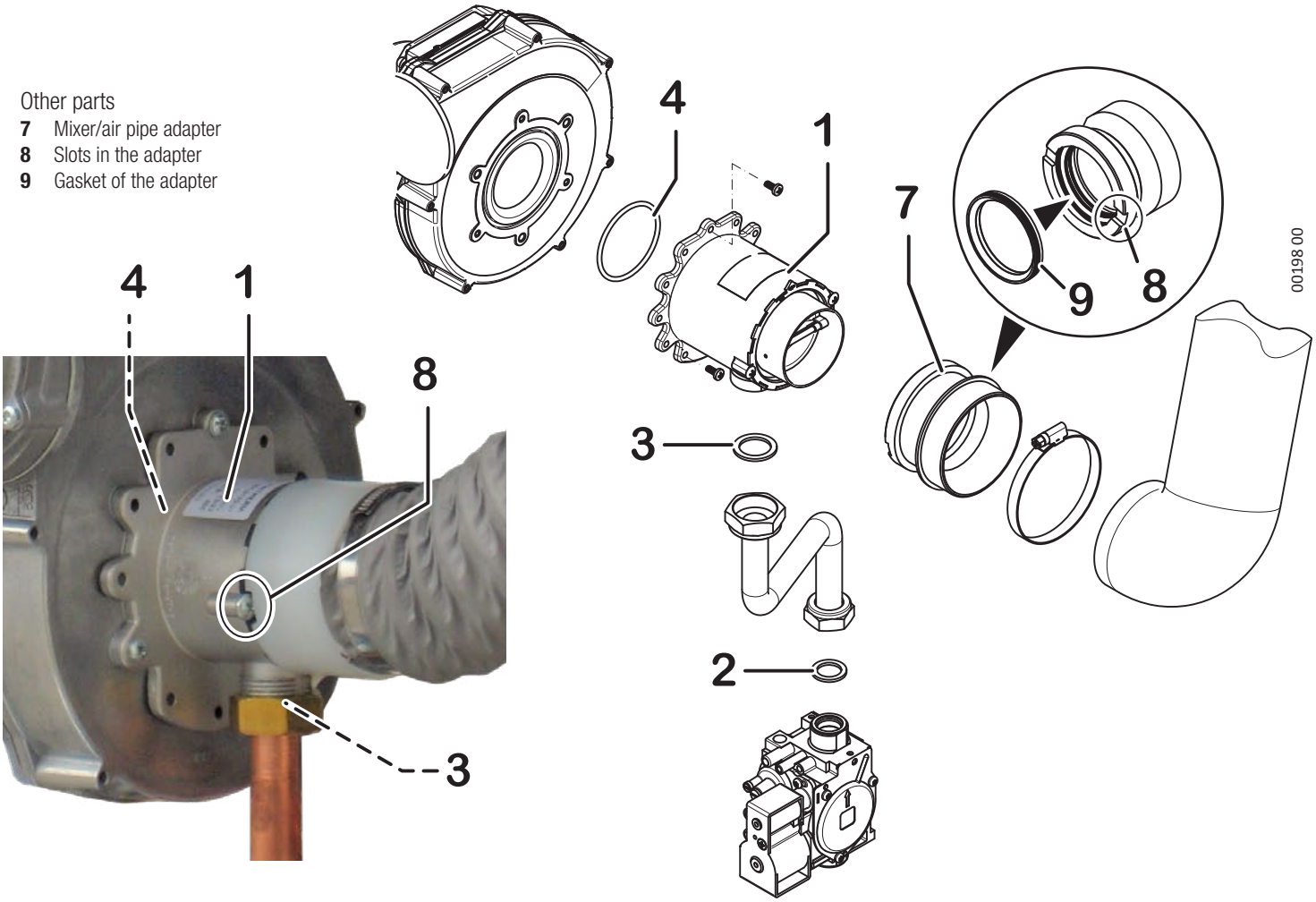

Model 160 K

Content

1 Flat gasket for gas pipe - gas valve connection (1")
2 Diaphragm for gas valve (calibrated, with a diameter suitable for the target gas of the kit)
3 Gas type indication label
4 Tank sticker (only in G31 conversion kits)

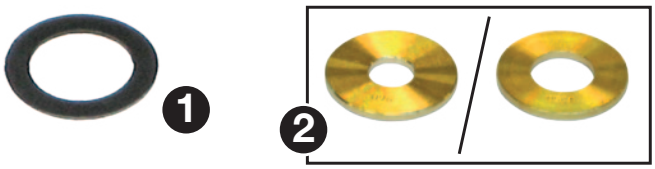

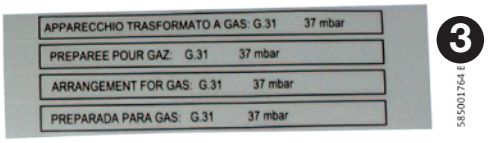

Kit installation

CAUTION:

- Set the boiler parameter **PC 01** in accordance with the type of gas in use: **0** for **Methane (G20)**, **1** for **Propane (G31)**; see also the Installer / Technician section in the boiler instruction booklet);

Take off electricity and gas: from the boiler.

- apply the label indicating the type of gas **3** in the area provided on the plate "WARNINGS" of the boiler;

- **always replace all gaskets**, even the flat gasket **2** between the gas pipe and the gas valve;
- remove the gas valve **12** from the fan unit **16**, disconnecting the wiring from the connector, unscrewing the swivel nut fitting of the gas pipe **11** and finally unscrewing the 3 fixing screws **13**;
- from the gas valve outlet hole, remove the original diaphragm **15** complete with gasket/support **14** ***by hand only***;

Do not use metal tools or other objects inside the calibrated hole of the diaphragm (if it has irregularities, gas supply problems may arise)

- remove the diaphragm **15** from the gasket/support **14** and replace it with the diaphragm **2** supplied in the kit; reinsert everything in the gas valve outlet hole;

The side of the diaphragm with the punched indication of the gauge must be facing the outside of the gas valve (i.e. towards the burner's fan)

- reassemble the gas valve **12** by replacing the gas gasket **1**, fix the gas valve from the fan assembly **16** using the 3 fixing screws **13**, tighten the swivel nut fitting **11** and reconnect the gas valve wiring.
- In case of supply from G20 to liquid gas, **it is important that the boiler is fed exclusively with commercial Propane G31 and not with Butane G30**. Therefore, to inform the fuel supplier about this, apply sticker **4** on the gas tank or in its immediate vicinity, so that it is clearly visible to the employee when refueling.

Restore the electricity and gas supply to the boiler;

check the absence of gas leaks;

test the correct combustion.

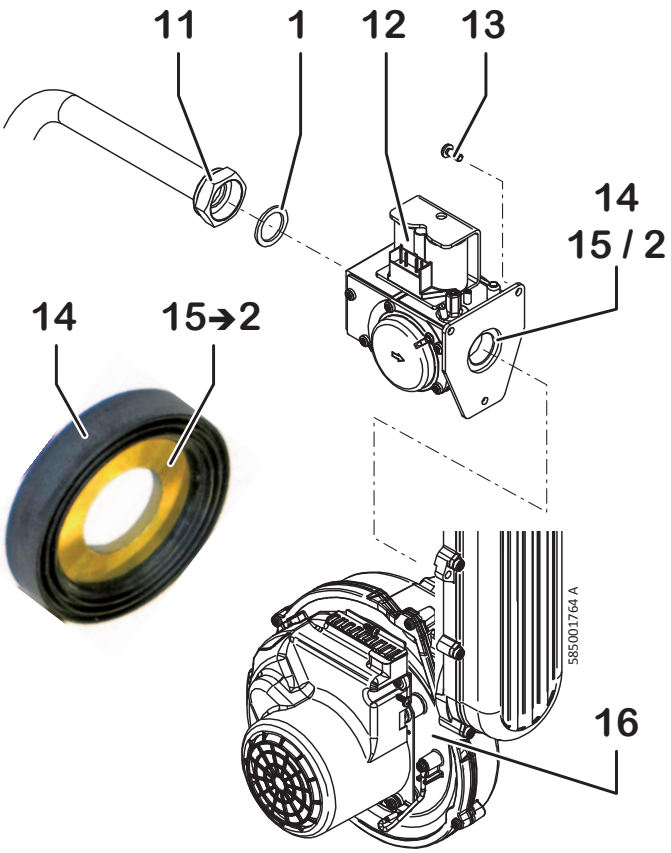

Parameters to manage boiler

Access to parameter setting menu

1. Boiler status: OFF
   - Push at the same time: + and +
   - Keep on pushing **for 10 seconds** until **SERVICE** appears.
2. The number on the left shows the **# of parameter**. Scroll the parameter with + or −
3. The number on the right shows **the value of the parameter**, Set the value with + or −
4. To store changes, push plus **for 3 seconds**
5. Exit function with button

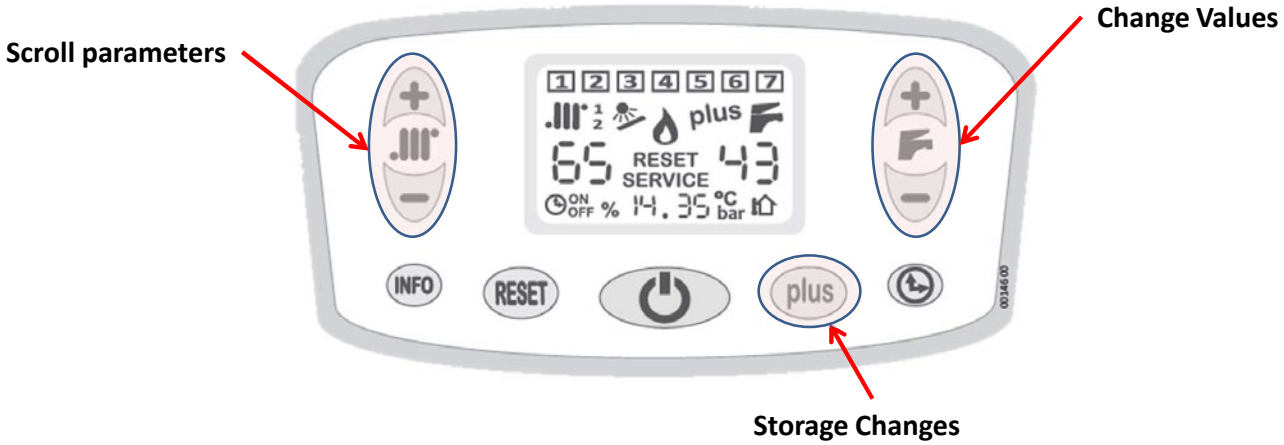

Parameter table (sort by number)

Color Key Suggested to not modify

PAR	Boiler Config	Description	Values	Factory Setting	Note
00	All	Power of boiler (it is set by technician in production)	0 - 5	Based on type	0/1 - Not Used 2 – 50 kW 3 – 70 kW 4 - 90 kW 5 - 115 kW 6 - 160 kW
01	All	Type of gas	0 – 1	Based on type	0 – NG 1 – LPG
02	All	Temperature Range for CH demand	0 - 1	0	0 – Standard Range 35 ÷ 78 °C 1 – Low Range 20 ÷ 45 °C
03	All	Slow Ignition	---	25	50-70 kW = range 10-60 90-115 kW = range 10-40
04	All	Max power on CH demand	00 – 99	99	The value is a percentage of the maximum of gas valve
05	All	Functionning of pump on CH demand	0 – 2	0	0 – Standard working 1 – Pump always ON 2 – Pump always OFF
06	All	Delay of re-ignition boiler after SET reached	0 – 15	3	Minutes
07	All	Functions for bleeding hydraulic plant	0 – 3	0	0 – Functions OFF 1 – Bleeding plant on the Heating side 2 – Bleeding plant on the Sanitary side 3 – Bleeding plant on both side
09	All	Timing to reach the maximum power in CH demand	20 - 120	25	Seconds
10	All	Timing to reach the maximum on CH demand after switching OFF for high temperature	1 – 10	2	Minutes.
12	All	Chimney function (for service tests)	0 - 1	0	0 – Boiler ON at the min fan revolution 1 – Boiler ON at the max fan revolution
13	All	Min fan revolution *(Not advised changing)	110-300	Based on Gas	r.p.m x 10
14	All	Max fan revolution *(Not advised changing)	380-700	Based on Gas	r.p.m x 10

PAR	Boiler Config	Description	Values	Factory Setting	Note
15	All	Pre-Ventilation	15-60	30	Seconds
16	All	Post-Ventilation	10-60	20	Seconds
17	All	Temperature SET for TA2	0 / 20-80	0	0 – Input for Telephone controller 20 – 80 SET flow temp following demand from TA2
18	All	Showing fan revolutions	0 - 1	0	0 – Function DEACTIVATED 1 – Function ACTIVATED for 15min
19	All	Delay of switching ON, after CH demand	0 - 5	0	Minutes. It is used when there are zone-valves with long open time, on the plant.
20	All	Timing of pump functionning after CH demand	0 - 240	30	Seconds
21	Singular	Timing of pump functionning after DHW demand	0 – 240 tank	180 Tank	Seconds
22	All	Delay of operating time for ON error E24 (clicson low temp)	0 – 120	30	Seconds. Contact «TP» on the electric scheme
23	Singular	SET temperature of tank	0 30 - 60	0	0 – Settable by knob on control panel 30 – 60 temperature set by the technician and not settable anymore by the user
24	Singular	SET temperature of tank during the hourly tank preparation	0 20 - 50	40	0 – Tank not prepared 20 – 50 temperature SET Tank when hourly tank preparation function is OFF
25	Singular	ΔT for re-ignition boiler on tank preparation demand	1 - 10	3	ON burner for Tank demand = SET – (PAR25)°C
26	Singular	ΔT to get the max flow temperature during tank preparation	5 - 15	8	ΔT = SET Tank – T current. If ΔT > (PAR26): then T flow = max value
27	Singular	ΔT to set the min value of T flow on Tank preparation demand	5 - 20	15	T flow min = SET Tank + (PAR27)°C

PAR	Boiler Config	Description	Values	Factory setting	Note
28	Singular	Anti-legionella Function (ON/OFF)	0 50 - 70	60	0 – DEACTIVATED 50 – 70 Temperature of water during this function
29	Singular	Activation timing Anti-legionella, after not having reached Temperature at PAR 28	1 - 15	7	Days.
30	Singular	Duration of Anti-legionella function	0 - 30	1	Minutes.
31	All	Fan speed for fan/chimney flues validation test	0 - 99	99	The same for all power
32	All	Fan speed threshold to be reached for fan validation test	0 - 99	Based on boiler power	50 kW = 62 70 kW = 48 90 kW = 75 115 kW = 60 160 kW = 70
33	All	Modulating Pump Activation (only Heating demand)	0 - 2	0	0 – modulating disable 1 – modulating with ΔT fixed 2 – modulating with ΔT dynamic
34	All	Set the ΔT for modulating pump	0 - 3		0 – ΔT = 20°C 1 – ΔT = 15°C 2 – ΔT = 10°C 3 – ΔT = 5°C
35	All	Max modulating pump power	65 - 99	---	Linked to PAR 0, which sets this based on boiler power . It is NOT reccomended to change this value
36	All	Set pressure values for loss of water switch	0 – 3	3	0 – Trasducer not present 1 - OFF = 0,5bar, ON = 1bar 2 - (50-70 kW) OFF = 0,4bar, ON = 0,7bar 2 - (90-115 kW) OFF = 0,7bar, ON = 1,4bar 3 - OFF = 0,8bar, ON = 1,2bar

PAR	Boiler Config	Description	Values	Factory setting	Note
37	All	Type of plant filling-in *(not used in these models)	0 30 - 60	0	0 – Automatic From 30 to 60 litre of water inlet
38	All	Fan revolution during Post Ventilation	40-99	70	% of max fan revolution
39	All	External Temperature Correction	-5÷+5	0	Degrees (°C)
40	All	Booster function: Heating SET timing of increasing , until max SET.	0/ 1-60	0	If function activated, it increases Heating SET of +5°C. 0 = disabled 1-60 = Minutes;
41	All	Min Flow Temperature	20-50 20-35	---	If PAR 2 = 0 then range 20÷50; Default 35°C If PAR 2 = 1 then range 20÷35; Default 20°C
42	All	Switching OFF burner Temperature from SET	0-10	5	Degrees(°C)
43	All	Switching ON burner Temperature from SET	0-10	0	Degrees(°C)
44	All	Management of connector 67 on PCB for external heating pump	0-3	0	0 = Standard functioning (linked to heating demand) 1 = Always ON 2 = Only linked to demand from TA (not TA2) 3 = Linked to both Heating and DHW demands
45	All	Max timing of DHW demand	0/ 10-180	0	0 = disabled 10-180 sec = After this time of no-stop DHW demand, boiler gives precedence to heating demand.

User views (general information on the display, for end user)

What it shows:

Cyclical views containing some information, such as:

- **Plant pressure**
- **External temperature (if external probe is present)**
- **Current clock (if regulated before)**

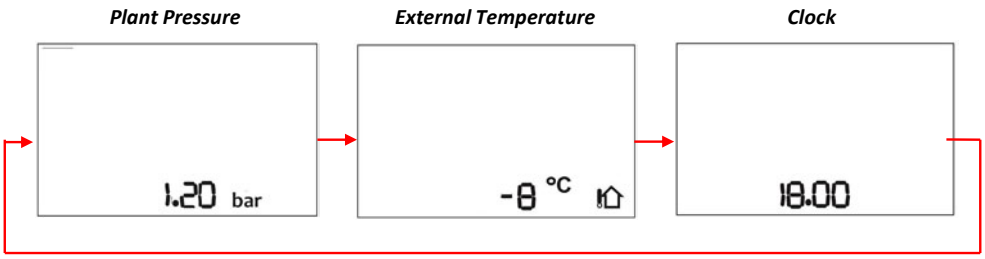

How to activate:

During normal functioning pressing briefly INFO button, User Views are showed:

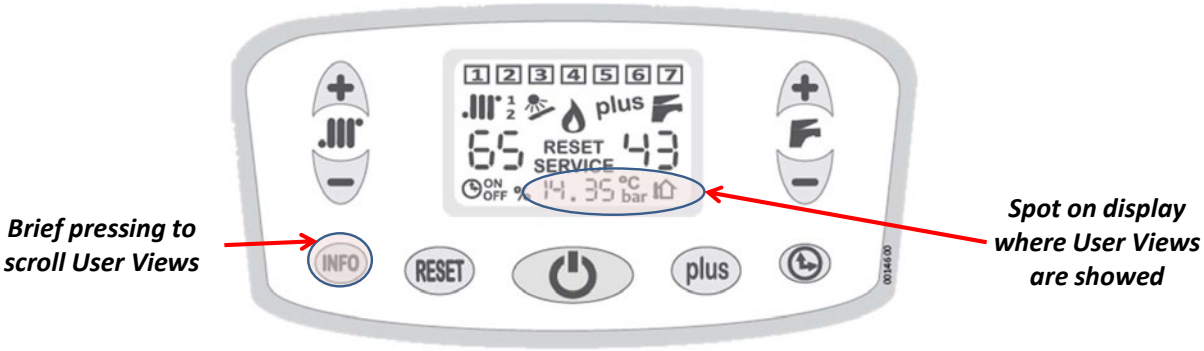

Technical views (specific information for technicians)

What it shows:

Cyclical views containing some information, such as:

- **Current Information**
- **Settings**
- **External Probe information (if present)**

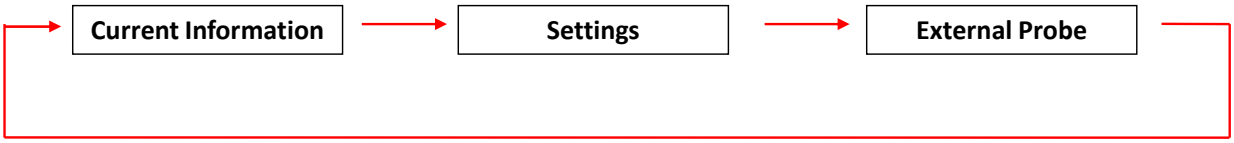

How to activate:

During normal functioning pressing for 5 sec. INFO button, Technical views are showed:

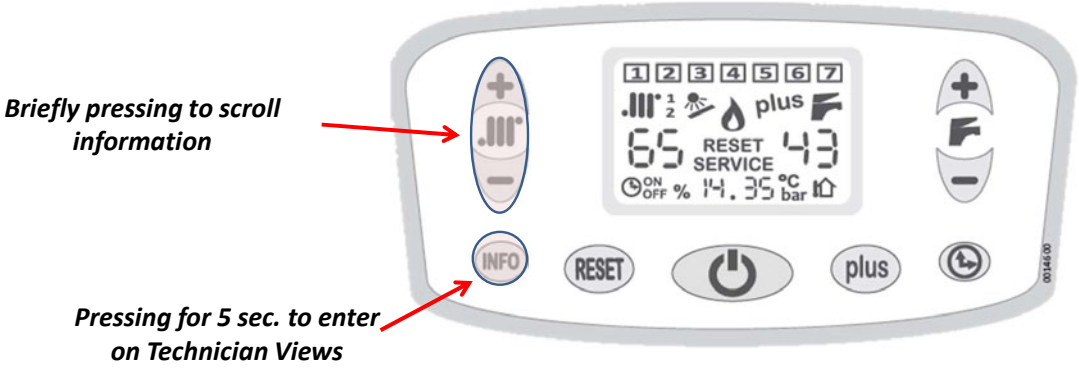

Current Information

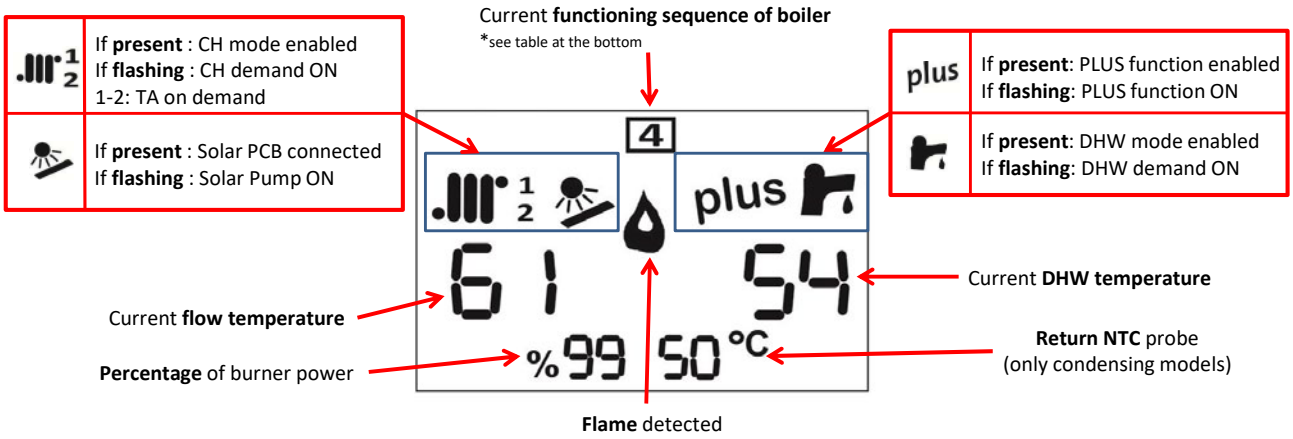

N°	Ignition Step	Description
	NO DEMAND IN PROGRESS	NO demand in progress
1	STARTING CHECK CYCLE	Fan Minimum Revolutions control
2	START FAN CYCLE	Fan ON, checking fan revolution (NO flame yet)
3	BURNER CYCLE:	Gas valve open and sparkling but NO flame yet
4	NO DETECTION FLAME	Timing for detection flame is over: waiting for new ignition attempt
5	DETECTION FLAME DONE	Slow ignition is running
6	MODULATION CYCLE	Calibration of gas quantity burned according to kind of demand
7	ENDING CYCLE	Gas Valve OFF, post circulation and post ventilation

Settings

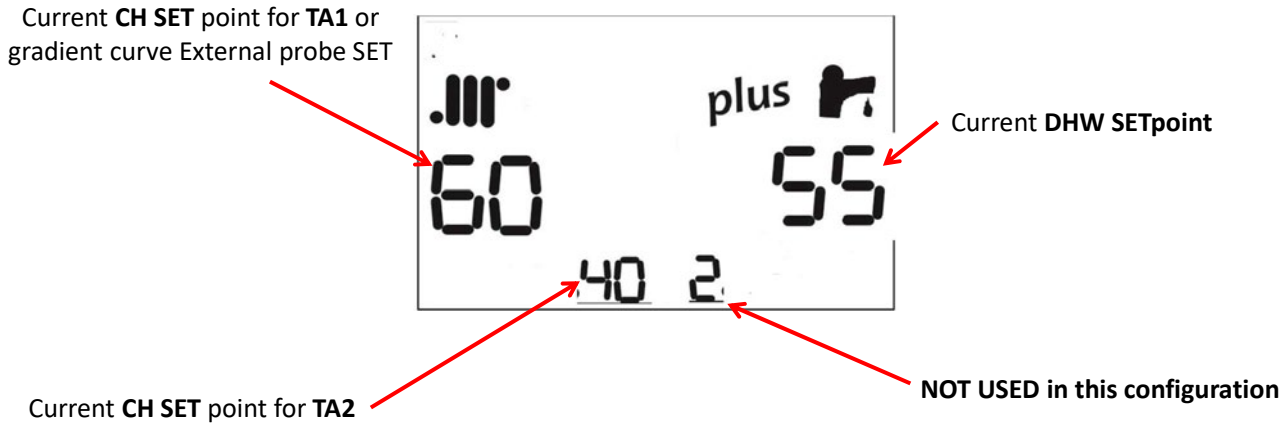

Alarms - errors

Last 5 errors log (for technician)

This function allows technician to obtain information about errors occurred on boiler.

What it shows:

Cyclical views containing last 5 errors detected:

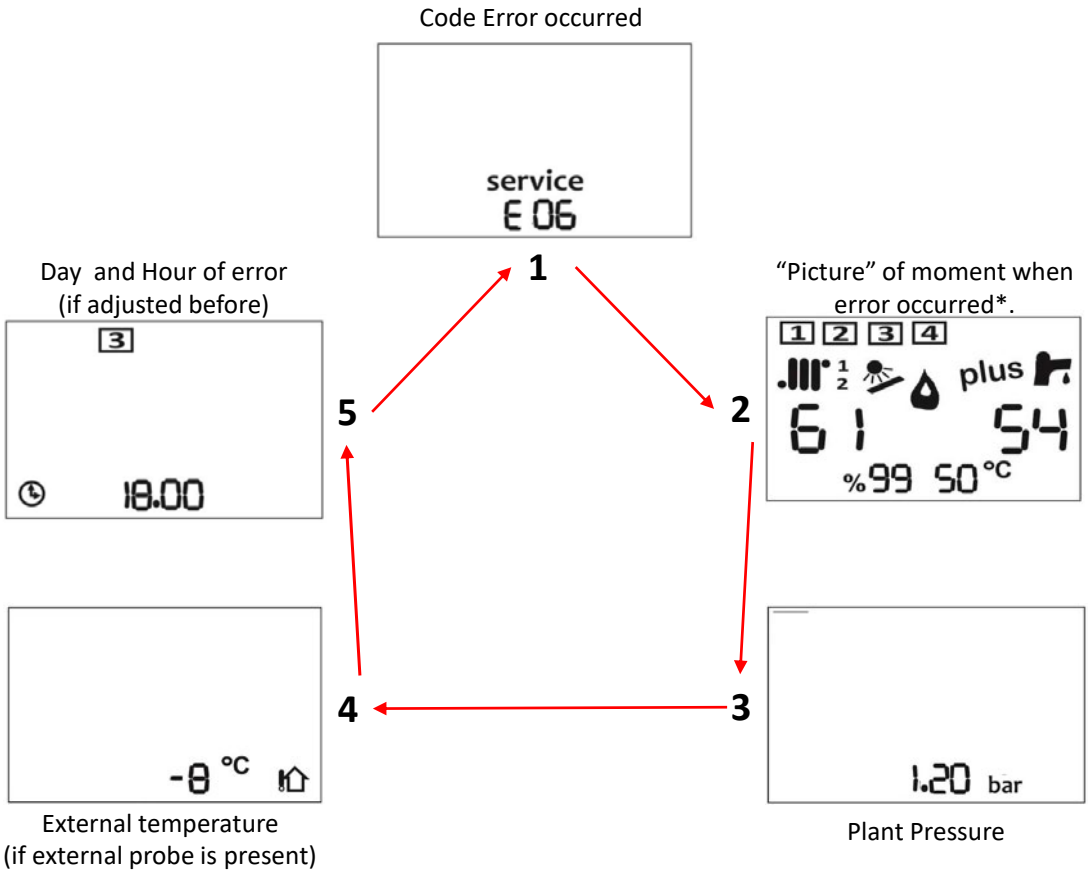

* The details showed, in this page information, are the same as "Current Information" of Technician views

How to activate this function?

1. When boiler is in OFF mode, pushing **for 6 sec** button INFO, the *"Last 5 errors"* function is enabled.
2. Pushing buttons + and − to scroll errors occurred.
3. Pushing buttons + and − to scroll pages information about single error.

Errors list and description

Error code	Kind of error	Description
E 01	RESET	No flame detected.
E 02	RESET	High temperature on primary side.
E 03	RESET	Thermofuse contact is open.
E 05	SERVICE	CH flow probe value is out of range.
E 08	RESET	Flame lost 5 times after detection
E 10	SERVICE	Low pressure on the plant
E 12	SERVICE	Tank probe value is out of range.
E 15	RESET	Return probe value is out of range.
E 16	RESET	N° of fan revolutions is not corrected for functioning.
E 24	RESET	Low temperature plant thermostat is open.
E 29	RESET	Possible obstruction on flues pipes or chimney flues
E 31	SERVICE	Comunication between PCB and remote control is not correct.
E 35	RESET	Flame detection with Burner ON.
E 38	SERVICE	External probe value is out of range.
E 39	SERVICE	Anti-freeze function: when boiler is switched ON and 1 probe feels 0°C, than no burner ON.
E 43	SERVICE	Return probe has felt high temp for more than 10 sec.
E 62	SERVICE	No communication between Display and main PCB.
E 91	SERVICE	No communication between pressure transducer and main PCB.
E 92	SERVICE	Overpressure detected by transducer.

Plant bleeding function

How it works:
Activating this function, the boiler starts a cycle of plant bleeding in order to help technician to fill-in water in a better way.

Different bleeding options based on plant requirements:
1. only the CH side of plant
2. only the DHW side of plant
3. both CH and DHW sides

Every cycle takes 2 minutes and it is composed by:
- For 1':30'' Pump ON
- For 30'' Pump OFF.

Entire function (7 bleeding cycle repeated) takes about 15min, unless leaving manually the function before.

How to activate:

Parameter n°7

PAR	Description	Values	Factory setting	Note
07	Functions for bleeding hydraulic plant	0 – 3	0	0 – Functions OFF 1 – Bleeding plant on the Heating side 2 – Bleeding plant on the Sanitary side 3 – Bleeding plant on both side

Resistance value

Contact β 3977	
°C	Ω
0	33000
20	12500
40	5350
60	2500
80	1260
100	700

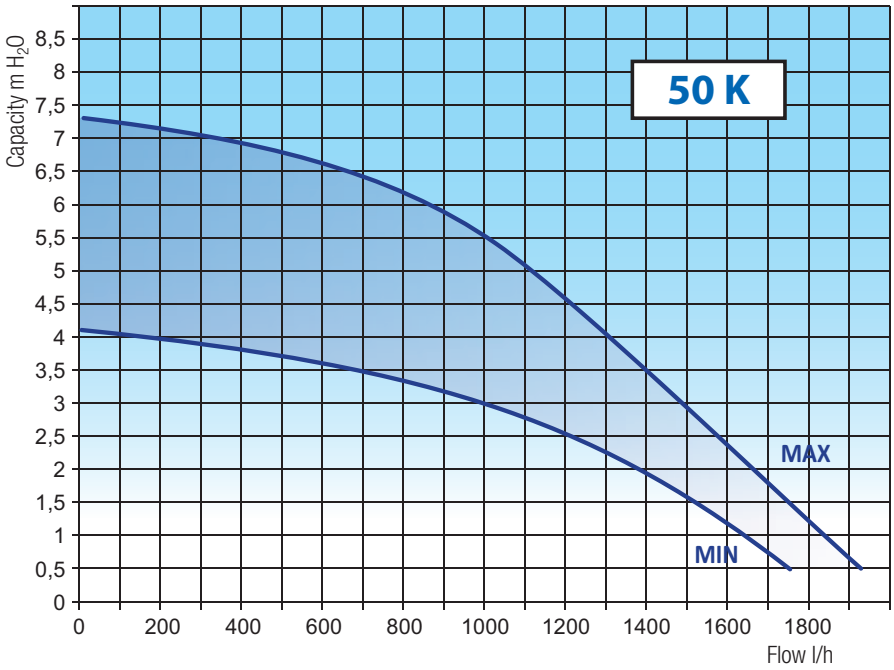
50 K
Capacity m H_2O
8,5
8
7,5
7
6,5
6
5,5
5
4,5
4
3,5
3
2,5
2
1,5
1
0,5
0
0
200
400
600
800
1000
1200
1400
1600
1800
Flow l/h
MAX
MIN

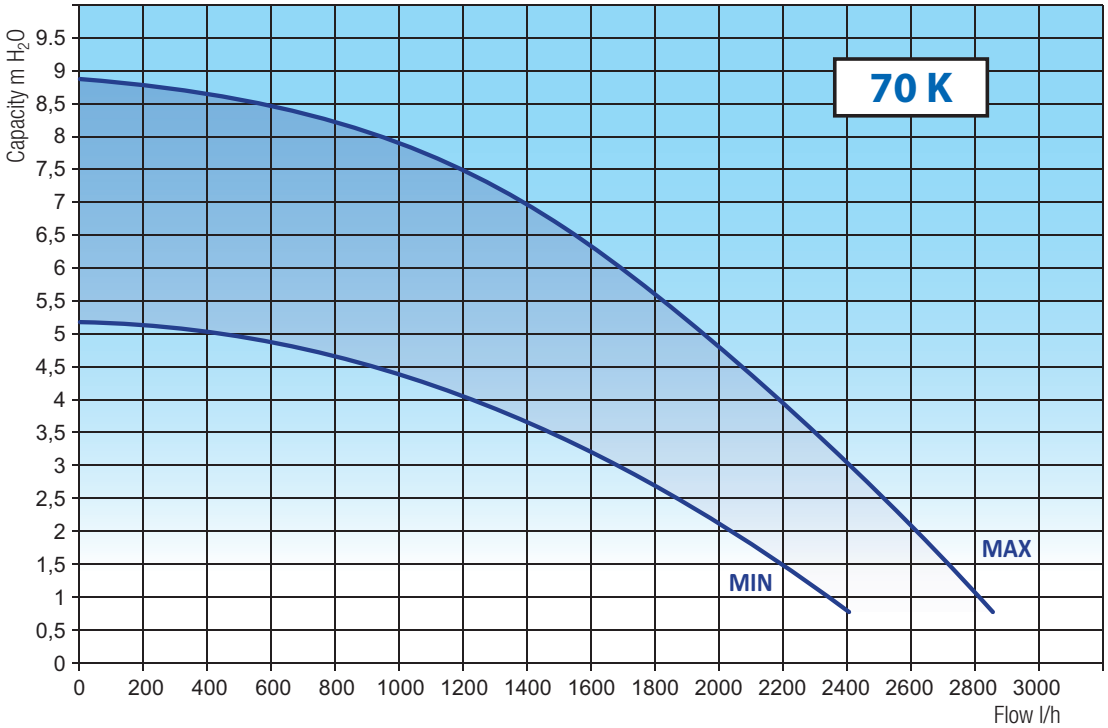
70 K
Capacity m H_2O
9.5
9
8,5
8
7,5
7
6,5
6
5,5
5
4,5
4
3,5
3
2,5
2
1,5
1
0,5
0
0
200
400
600
800
1000
1200
1400
1600
1800
2000
2200
2400
2600
2800
3000
Flow l/h
MAX
MIN

Pump capacity diagram

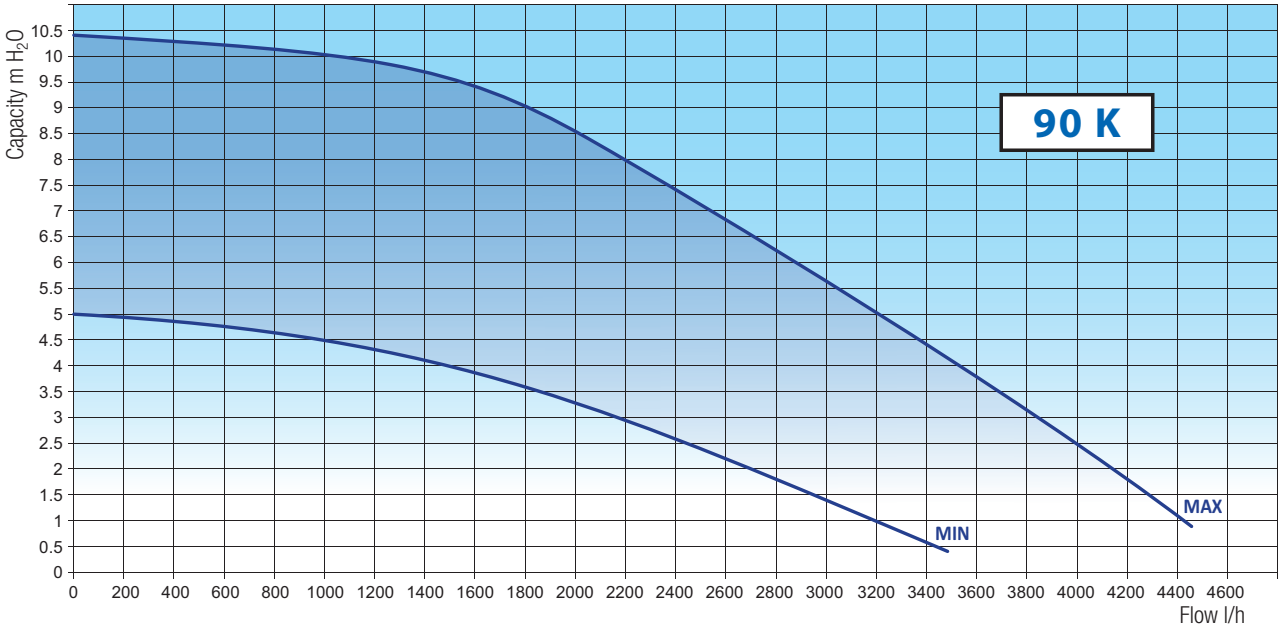

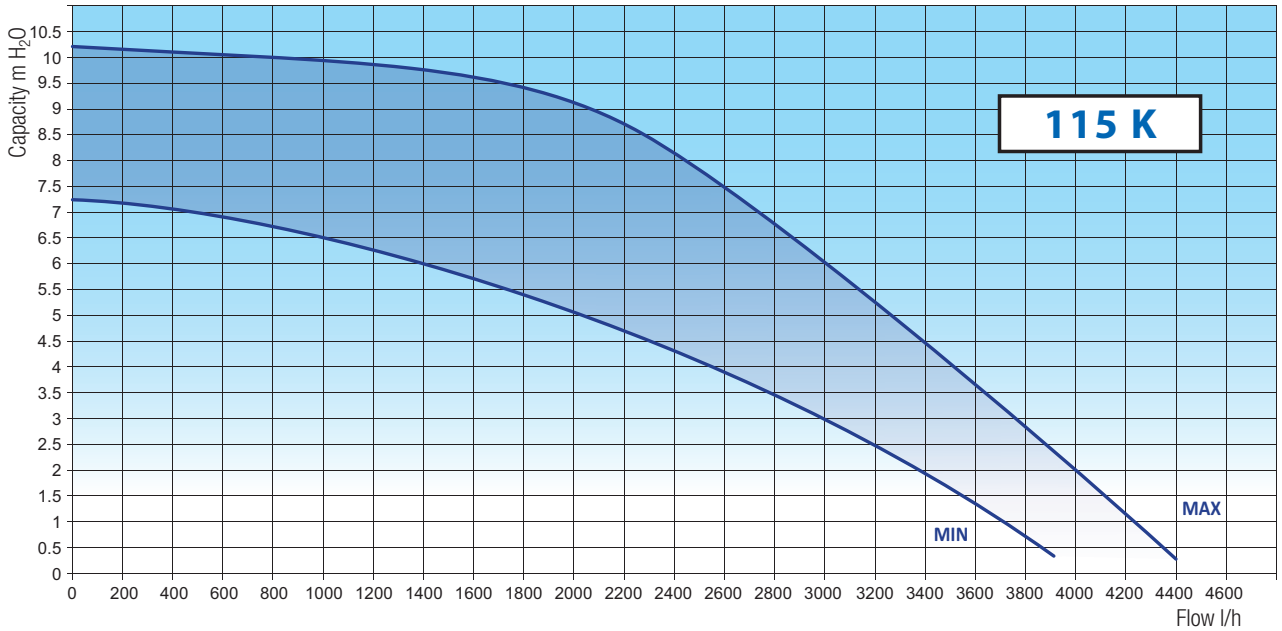

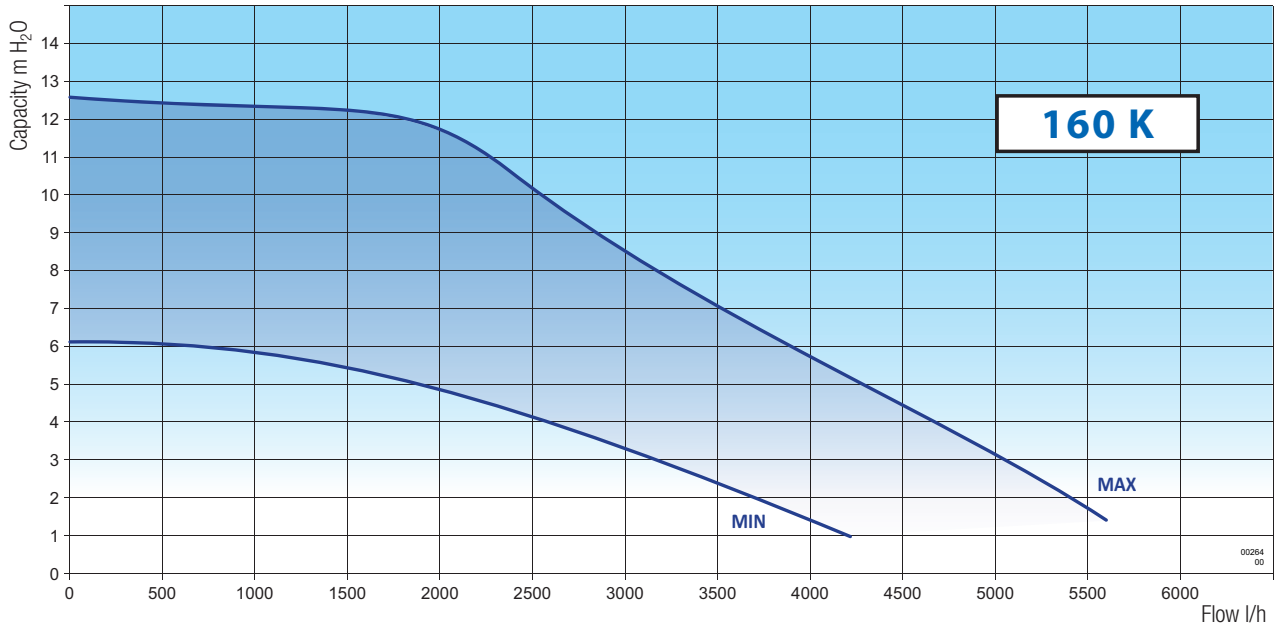

TECHNICAL SPECIFICATIONS	Unit of meas.	Time Power 50 K		Time Power 70 K		Time Power 90 K		Time Power 115 K		Time Power 160 K	
Reference gas		G20	G31	G20	G31	G20	G31	G20	G31	G20	G31
EC Certificate		0476 CQ 1281		0476 CQ 1281		0476 CQ 1281		0476 CQ 1281		0476 CQ 1281	
Category		II_{2H3P}		II_{2H3P}		II_{2H3P}		II_{2H3P}		II_{2H3P}	
Type		B23P - C13 - C33 - C43 - C53 - C63 - C83 - C93									
Operation temperature (min÷max)	°C	0 ÷ +60		0 ÷ +60		0 ÷ +60		0 ÷ +60		0 ÷ +60	
Maximum Power Input Qn	kW	47.5	47.5	63.0	63.0	85.0	85.0	108.0	108.0	150.0	150.0
Minimum Power Input Qr	kW	5.0	6.0	7.0	8.0	9.5	10.0	11.0	12.0	25.0	25.0
Maximum Power Output 60°/80°C *	kW	46.0	46.0	61.1	61.1	82.4	82.4	104.9	104.9	144.6	144.6
Minimum Power Output 60°/80°C *	kW	4.7	5.6	6.6	6.6	9.0	9.5	10.5	11.4	23.8	23.8
Maximum Power Output 30°/50°C *	kW	49.2	49.2	65.6	65.6	89.3	89.3	113.5	113.5	157.50	157.50
Minimum Power Output 30°/50°C *	kW	5.2	6.2	7.3	7.3	9.8	10.3	11.4	12.4	27.0	27.0
NO_X Class		6	6	6	6	6	6	6	6	6	6
Correct CO 0% O_2 (at Qn)	ppm	157.3	146.3	146.0	172.9	152.6	133.0	176.1	166.3	176.1	141.0
CO_2 (at Qn)	%	9.3	10.3	9.2	10.3	9.2	10.30	9.3	10.30	9.3	10.2
Condensation q.ty at Qn (at 30°/50°C *)	l/h	4.4	4.4	6.5	6.5	9.3	9.3	12.4	12.4	18.40	18.40
Condensation q.ty at Qr (at 30°/50°C *)	l/h	0.6	0.6	0.7	0.7	1.1	1.1	1.3	1.3	2.90	2.90
Condensation pH value	pH	2.8	2.8	2.8	2.8	2.8	2.8	2.8	2.8	2.8	2.8
Fume temperature at Qn	°C	83.0	83.0	82.0	82.0	71.9	71.9	75.0	75.0	79.7	62.3
Fume mass flow (at 60/80°C * at Qn)	kg/h	75.95	77.87	101.78	103.28	137.32	137.57	170.48	174.79	240.63	249.01
MEASURED EFFICIENCY *											
Nominal efficiency (NCV) at 60°/80°C	%	96.1		97.1		97.3		97.2		97.8	
Nominal efficiency (NCV) at 30°/50°C	%	103.5		104.1		105.0		105.1		105.0	
Efficiency at 30% load Qa (NCV) at 30°C	%	106.7		107.2		109.1		109.1		109.3	
* *return temperature / flow temperature; NCV = Net Calorific Value (=Hi) values are related to Average Power Output* **Qa** *for Range Rated appliances*											
HEATING DATA											
Temperature selection range (min÷max) *in main zone, with range at normal / low temperature*	°C	35÷78 / 20÷45									
Temperature selection range (min÷max) *secondary zone*	°C	20÷78									
Characteristics of water (or of thermal fluid) of heating system *(* = if there are aluminium parts along the heating system)*	°f pH	5 ÷ 15 °f pH 7.5 ÷ 9.5 (7.5 ÷ 8.5 *)									
Expansion tank	l	none (to foresee on the system, by the installer)									
Maximum working pressure	bar	3		3		4.5		4.5		4.5	
Boiler water content	l	3.5		4.0		9.0		11.5		14.0	
Max temperature	°C	95		95		95		95		95	
Boiler anti-freeze function temper. on / off	°C	5 / 30		5 / 30		5 / 30		5 / 30		5 / 30	
DOMESTIC WATER DATA											
Temperature selection range (min÷max)	°C	30÷60		30÷60		30÷60		30÷60		30÷60	
ELECTRIC CHARACTERISTICS											
Voltage/Frequency (rated voltage)	V / Hz	220÷240 / 50 (230V)		220÷240 / 50 (230V)		220÷240 / 50 (230V)		220÷240 / 50 (230V)		220÷240 / 50 (230V)	
Power (max)	W	145		190		255		315		480	
Protection rating		IP X5D		IP X5D		IP X5D		IP X5D		IP X5D	
DIMENSIONAL CHARACTERISTICS											
Length - Height - Depth	mm	*see "Dimensions and connections" on page 30*									
Weight	kg	39.4 / 43.5		45.8 / 49.9		86.7 / 92.4		91.5 / 97.2		108.3 / 114.4	
CONNECTIONS											
Gas and hydraulic connections		*see "Dimensions and connections" on page 30*									
Flue fitting: types, lengths, diameters		*see "Flue systems" on page 33*									
Min÷max fan residual head (for type C_{63})	Pa	25 ÷ 180		50 ÷ 280		10 ÷ 150		15 ÷ 165		25 ÷ 190	
GAS POWER SUPPLY PRESSURES											
Rated pressure	mbar	20	37	20	37	20	37	20	37	20	37
Pressure at input (min÷max)	mbar	17÷25	35÷40	17÷25	35÷40	17÷25	35÷40	17÷25	35÷40	17÷25	35÷40
Number of nozzles (Mixer group)		2	2	2	2	2	2	2	2	—	—
Diameter of nozzles (Mixer group) *(*=open/close)*	mm/100	460	345	740 / 570 *	470	640 / 560 *	480 / 440 *	640	520	—	—
GAS CONSUMPTION											
at Qn	m³/h	5.02		6.66		8.99		11.42		15.86	
	kg/h		3.68		4.88		6.59		8.37		11.63
at Qr	m³/h	0.53		0.74		1.00		1.16		2.64	
	kg/h		0.47		0.62		0.78		0.93		1.94

ATTENTION! Remove all the plastic caps placed to close the hydraulic connections and the condense outlet hose of the boiler

Models 50 K -70 K

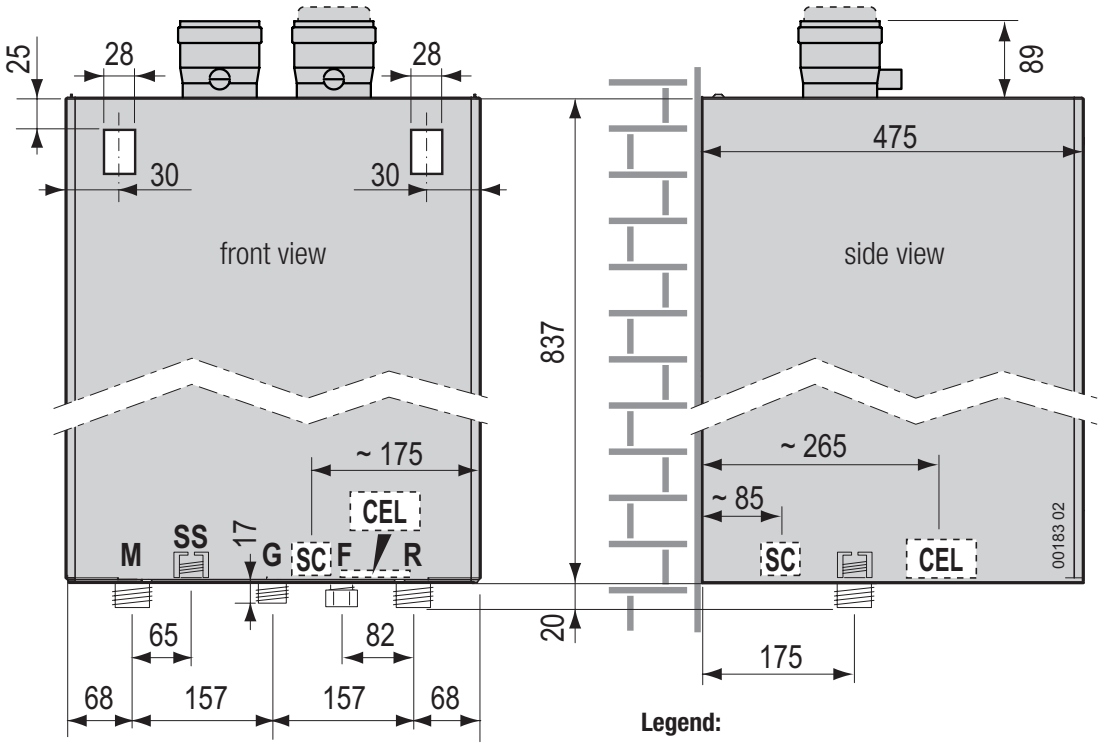

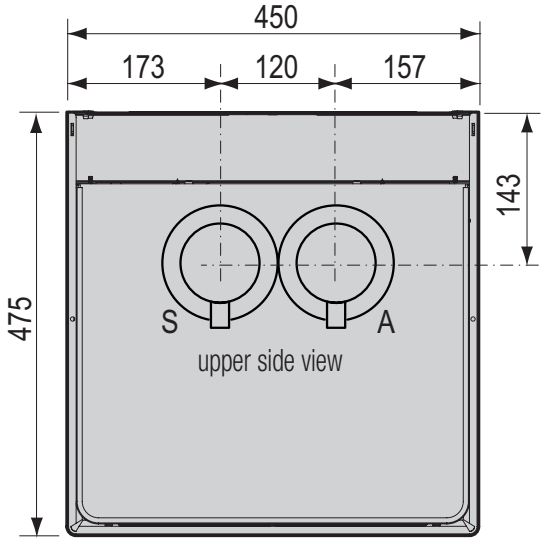

Legend:

A Suction (Ø 80 mm)
S Discharge (Ø 80 mm)

M System delivery (1¼"M)
SS Safety valve discharge (¾"F)
G Gas (1"M)
SC Condensation discharge (Ø 25mm) (approximate position)
F System filling connection point, with cap (½"M)*
CEL Electric connections (approximate position)
R System return (1¼"M)

* **includes non-return valve.** Any shut-off devices for system filling, outside the boiler, are managed by the installer. If the connector is not used, leave it closed using a sealed cap.

Models 90 K -115 K

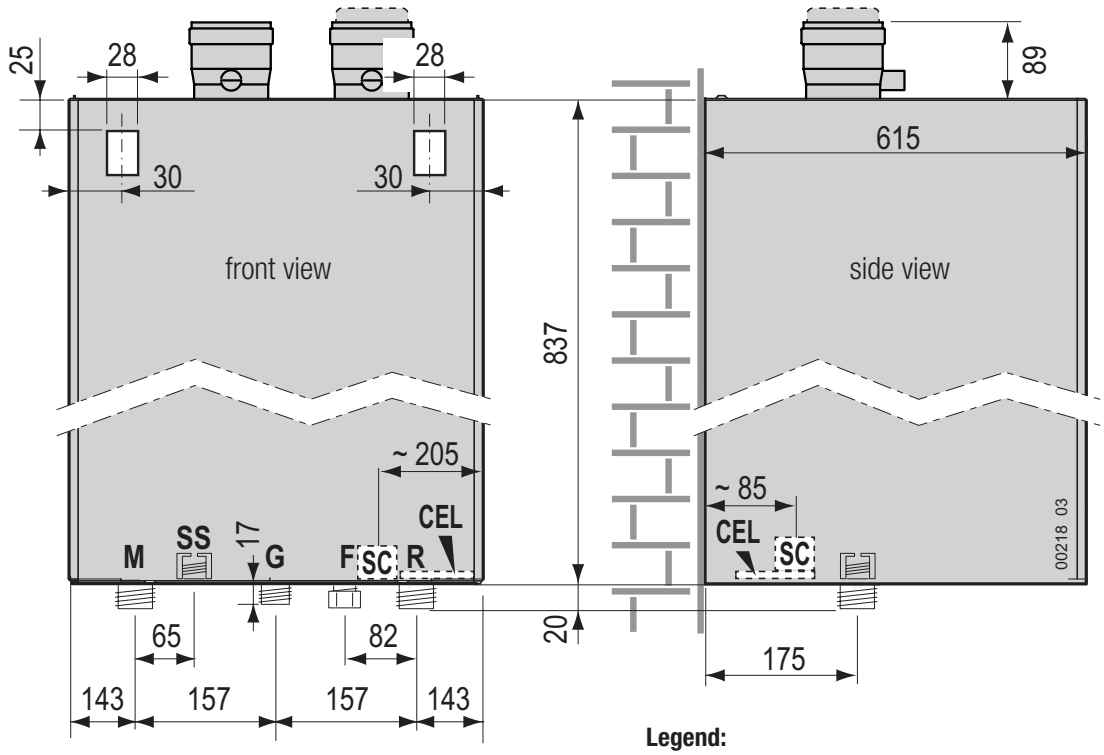

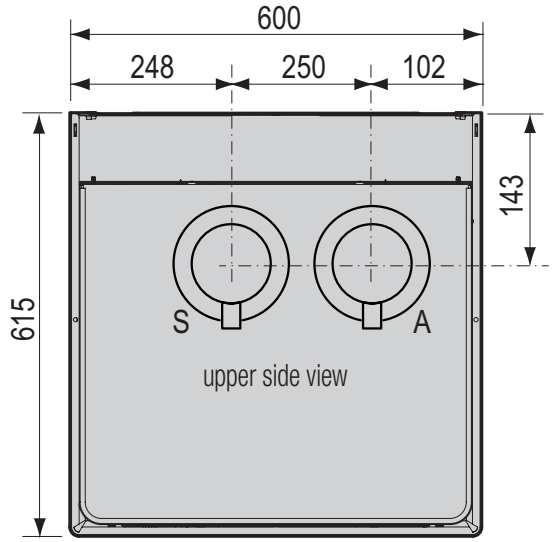

Legend:

A Suction (Ø 100mm)
S Discharge (Ø 100mm)

M System delivery (1¼"M)
SS Safety valve discharge (¾"F)
G Gas (1"M)
SC Condensation discharge (Ø 25mm) (approximate position)
F System filling connection point, with cap (½"M)*
CEL Electric connections (approximate position)
R System return (1¼"M)

* **includes non-return valve.** Any shut-off devices for system filling, outside the boiler, are managed by the installer. If the connector is not used, leave it closed using a sealed cap.

Models 160 K

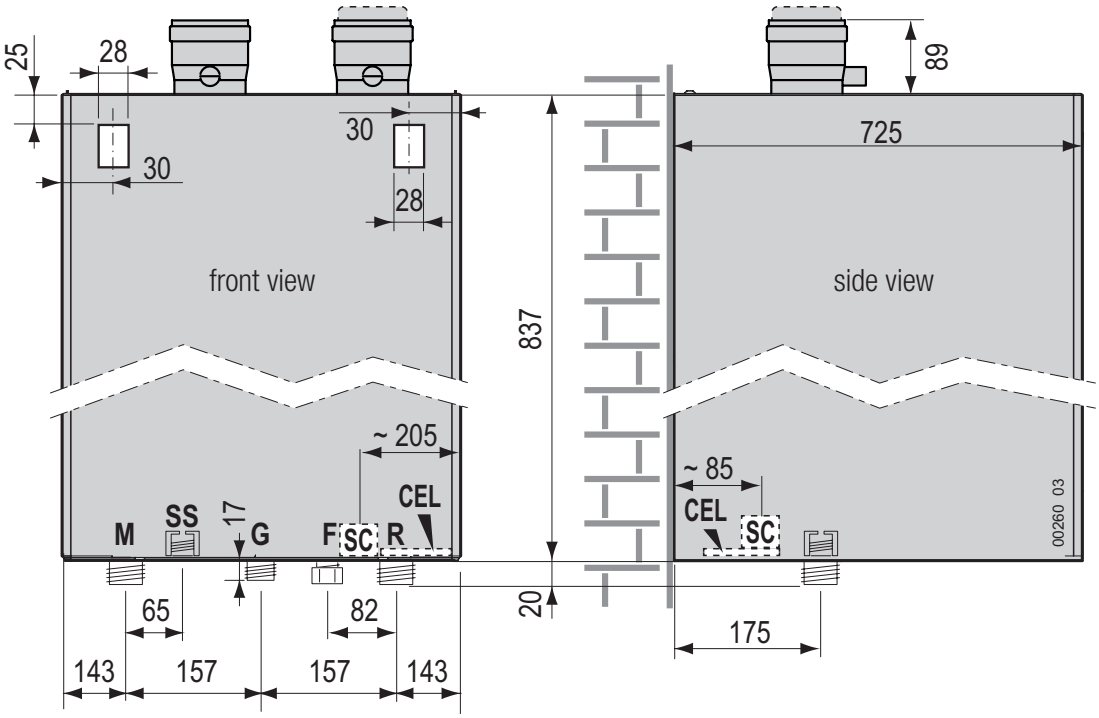

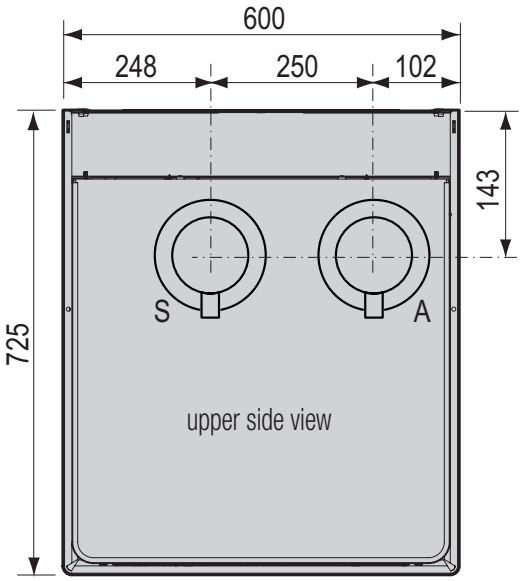

Legend:

A Suction (Ø 100 mm)
S Discharge (Ø 100 mm)

M System delivery (1¼"M)
SS Safety valve discharge (¾"F)
G Gas (1"M)
SC Condensation discharge (Ø 25mm) (approximate position)
F System filling connection point, with cap (½"M)*
CEL Electric connections (approximate position)
M System return (1¼"M)

* **includes non-return valve.** Any shut-off devices for system filling, outside the boiler, are managed by the installer. If the connector is not used, leave it closed using a sealed cap.

Separate system (C_{43} , C_{53} , C_{63} , C_{83} , $_{C93}$ *)

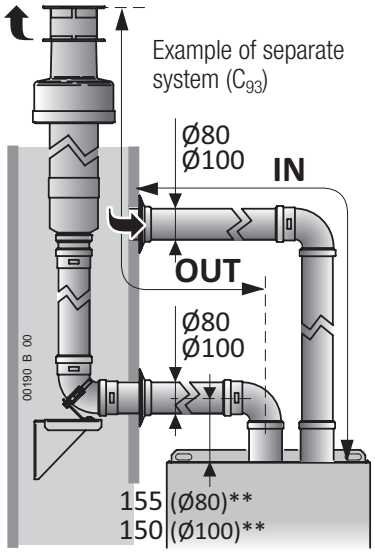

Mod.	Separate system Ø80 mm original***	
	IN+OUT min÷max (m)	OUT max (m)
50 K	2 ÷ 30	25
70 K	2 ÷ 30	25

Mod.	Separate system Ø100 mm original***	
	IN+OUT min÷max (m)	OUT max (m)
90 K	2 ÷ 30	29
115 K	2 ÷ 20	19
160 K	2 ÷ 20	19

**** Note:*** *With the separate system it is possible to create also systems of type C_{13} and C_{33}.*

*** Duct axis measurements are referred to the boiler upper profile and immediately to the entry of the first right-angle curve Differences in levels due to slopes are not considered.*

****** IMPORTANT: table is referred to original flue fitting accessories.*** *When using* ***NON-original*** *flue fitting accessories (certified for condensation, the use of which is allowed by the special approval of C6 boilers) refer to the relevant technical documentation.*

System with suction from room (B_{23P})

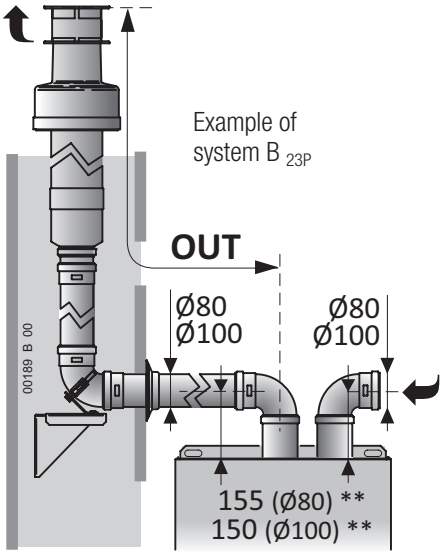

Mod.	System B23P Ø80 mm original***
	OUT max (m)
50 K	1 ÷ 25
70 K	1 ÷ 25

Mod.	System B23P Ø100 mm original***
	OUT max (m)
90 K	1 ÷ 29
115 K	1 ÷ 19
160 K	1 ÷ 19

Coaxial system (C_{13} , C_{33})

Mod.	Coaxial system Ø80/125 mm original***	
	Horizontal (THL) max (m)	Vertical (TVL) max (m)
50 K	8	10
70 K	8	10

Mod.	Coaxial system Ø100/150 mm original***	
	Horizontal (THL) max (m)	Vertical (TVL) max (m)
90 K	5	6
115 K	5	6
160 K	5	6

THL *Total Horizontal Length*

TVL *Total Vertical Length*

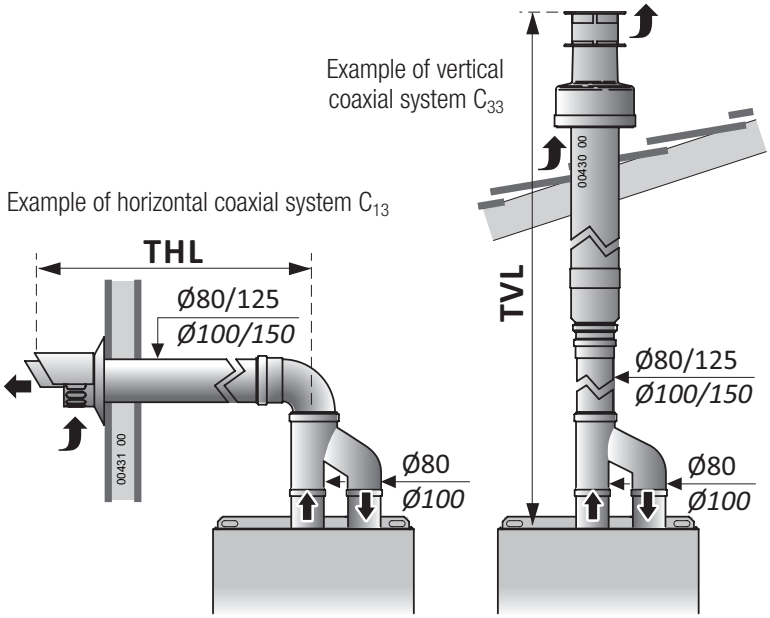

Remote control

This remote control **is more than a simple room thermostat**. Thanks to this, it is possible to **manage the boiler in all its settings** like DHW and CH temperature adjustment, **boiler reset** in case of boiler block, and of course it works as a **room thermostat** both in **manual** and **weekly program mode**. It's powered by the boiler (in safety low voltage), so **it doesn't need batteries.**

Remove Remote Control from its box and **keep relevant instructions for use. Attach them to this instruction booklet.**

Neither the Remote Control nor the relevant cable coming from the boiler must be connected to the 230 V power supply, for no reason.

Cable maximum length must be less than 50 m. In order to avoid malfunctions caused by disturbances, Remote Control connections and other possible low voltage connections must be kept separated from power supply system cables, e.g. letting them pass through separate sheaths.

1. Make sure that boiler is not electrically powered;
2. install device as described in **paragraph 1** of the booklet supplied with the Kit;
3. connect Remote Control connections **"OT" nr. 1-2** to the "TA - Room Thermostat - Remote Control" cable coming from the boiler using a suitable bipolar terminal. See also "Electric diagrams" on page 10;

   Note: *Remote Control connection has no polarity.*
4. power supply the boiler and select the **Summer** mode;
5. check the correct work of the device. The electronics should recognize it automatically.

Hereafter, the boiler should be left on Summer mode; the boiler work is managed by the Remote Control, including the OFF, Summer and Winter modes, and the technical functions (such as several additional functions).

In case of problems in wirings or in boiler setting, the alarm E31 will appear. See E31 alarm description on page 25.

External probe kit

The Outdoor Sensor manages automatically the CH flow temperature** as a function of the outdoor temperature, thus avoiding the user to adjust it manually. This function is also named "shifting temperature".

*** that's the temperature of the heating elements. Don't mistake it with the room temperature (managed by the room thermostat or by the Remote Control, but not by the boiler) that doesn't depend on the first one.*

The installation must be made by a professionally skilled technician following the instructions supplied with the kit. Refer to "Electric diagrams" on page 10 for the links to the Main Board.

After the installation of the Sensor, the buttons **+.III°** and **−.III°** won't adjust directly the CH flow temperature, but the dispersion factor "kd" that's the response of the outdoor temperature, detected by the sensor, on the CH flow temperature, as shown in the following graph.

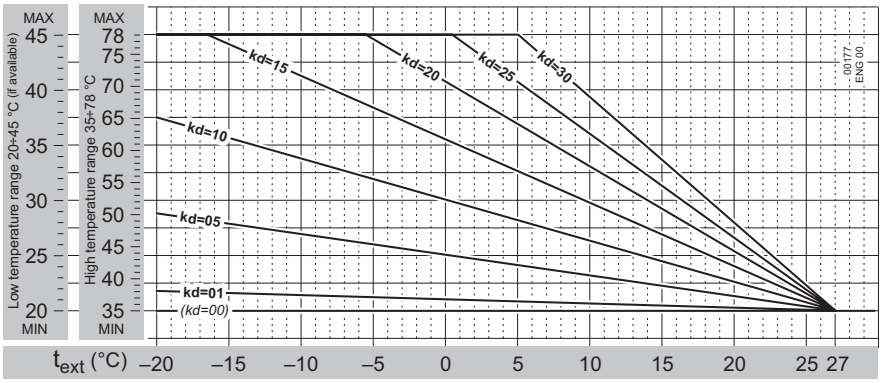

Because of the wide buildings typologies, it's impossible to give precise indications on kd value to set. The correct setting must be determined case by case and will have, as a result, an optimal comfort in all the climatic conditions requiring heating, i.e. a prompt reaching of the room temperature with cold weather and no room overheating during mild periods.

Practically, kd value should be adjusted depending on the estimated efficiency of the building's thermal insulation. Its range is from 01 to 30: use higher values when there is a high thermal dispersion and therefore a less efficient insulation (and vice versa).

Outdoor Sensor kit and Remote Control

If also the Remote Control Kit is installed, please refer to the relevant instruction handbook for details about the combined working of Outdoor Sensor and Remote Control itself.

Note

www.italtherm.it

SERVICE TIME-POWER-K_20210210 20210217

ITALTHERM S.p.A. I Via S. D'Acquisto I 29010 Pontenure (PC) Italy I P.iva - C.F. 01594830331 I Tel (+39) 0523.575611 I **www.italtherm.it**